EN

Numatic

HT4045
TT4045G
TT4055G

SCRUBBER
DRYER

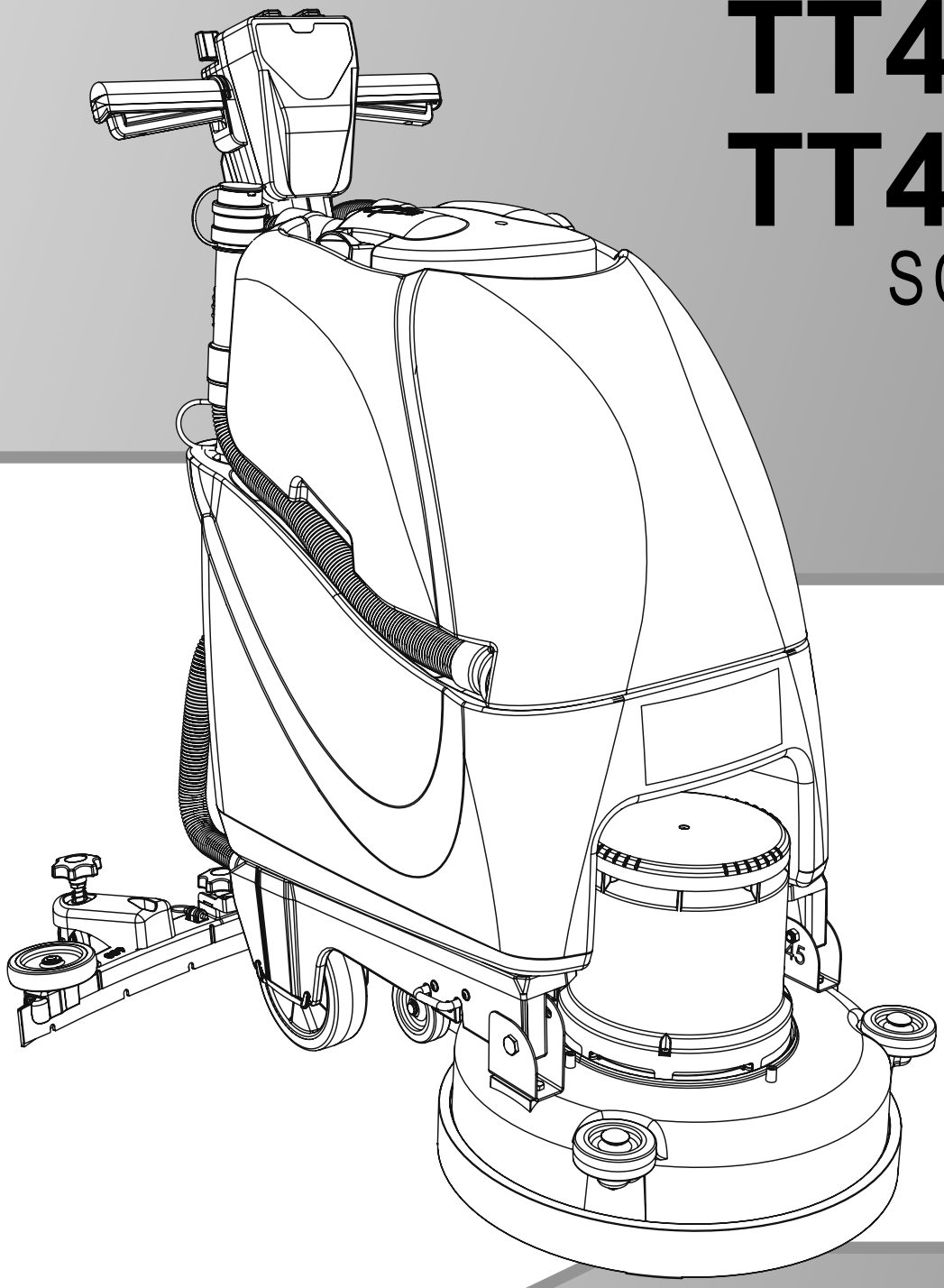

Original Instructions

CAUTION, Read instructions before using the machine

Keep for future reference

Nu·Assist

Download on the App Store

ANDROID APP ON Google play

numatic.com

Index

Machine Overview .....Pages 2-3

Machine Set up Guide .....Page 4-7

Tilting the Handle .....Page 4

Fitting the Top Tank .....Page 4

Fitting the Brush .....Page 4

Raising/Lowering the Brush Deck .....Page 5

Fitting the hose guide .....Page 6

Fitting the Floor tool .....Page 5

Filling the Clean-water tank.....Page 6

Fill Level Indicator .....Page 7

Control of Cleaning substances (COSHH) .....Page 7

Clean Water Tap On / Off .....Page 7

Reset Switch .....Page 7

Pre-Cleaning Advice .....Page 7

Machine Operation .....Page 8-9

Lowering the floor tool .....Page 8

Breakaway floor tool feature.....Page 8

Pre Scrubbing .....Page 8

Setting the cleaning controls .....Page 9

Regular Maintenance .....Page 10

Tanks and Filters .....Page 10

Changing the Floor tool Blades .....Page 11

Specifications .....Page 12

HT 4045 Face Fitting .....Page 13-14

Schematic Diagram .....Page 14

Rating Label / Personal Protective Equipment / Recycling .....Page 15

Information for Scrubber Dryer.....Page 16

Off-Aisle Cleaning Kit .....Page 17

Trouble Shooting .....Page 17

Recommended Spare Parts .....Page 17

Warranty .....Page 18

EU Declaration Document .....Page 19

Company Address .....Page 20

PLEASE READ
BEFORE COMMENCING OPERATION

After the removal of all the packaging, carefully open and check the contents

- Owner Manual
- Scrub Brush
- Floor Tool
- Floor Tool Hose

1	Operator Control Panel
2	Separator
3	Top Tank (waste-water)
4	Waste-water Emptying Hose
5	Bottom Tank (clean-water)
6	Deck Locking Pin
7	Brush Deck
8	Handle Position Lever
9	Vacuum Switch
10	Pump Switch
11	Power Light
12	On / Off Switch
13	Triggers
14	Clean-water Tank Fill Point / Filler Hose
15	Floor tool Vacuum Hose
16	Vacuum Hose
17	Clean-water Tank Emptying Hose & Fill Level
18	Floor tool Lifting Lever
19	Floor tool Retaining Knobs
20	Semi Parabolic Floor tool
21	Clean-water Filter
22	Brush
23	Reset Switch (100-120v Machines Only)

In the event of a breakdown contact your Numatic dealer or the
Numatic Technical
Help line +44 (0)1460 269268

Machine Overview

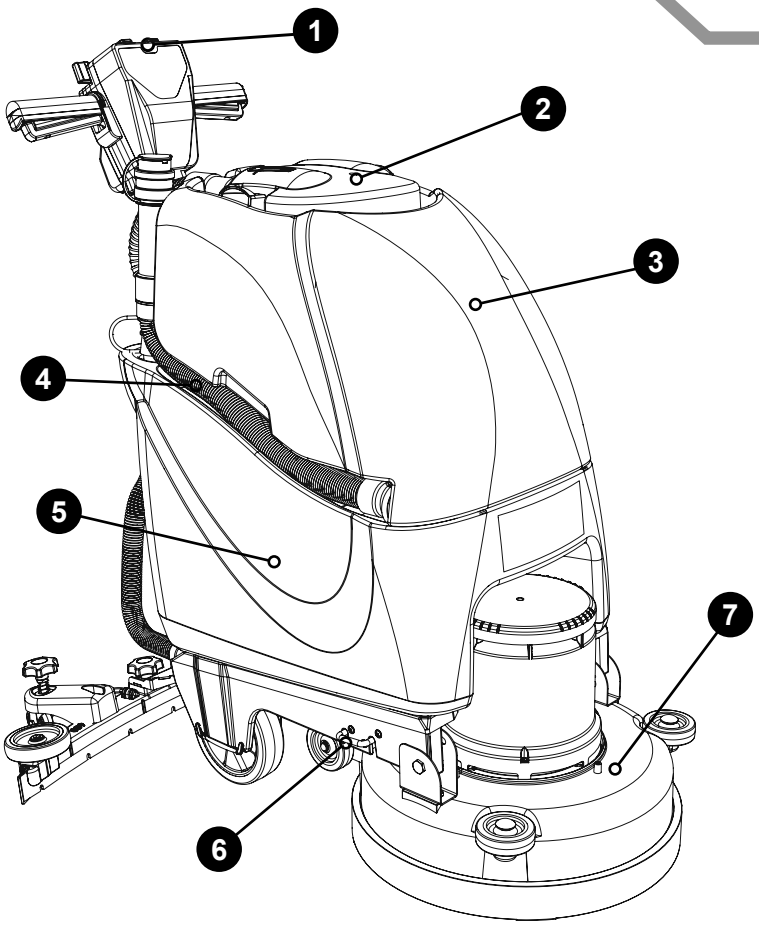

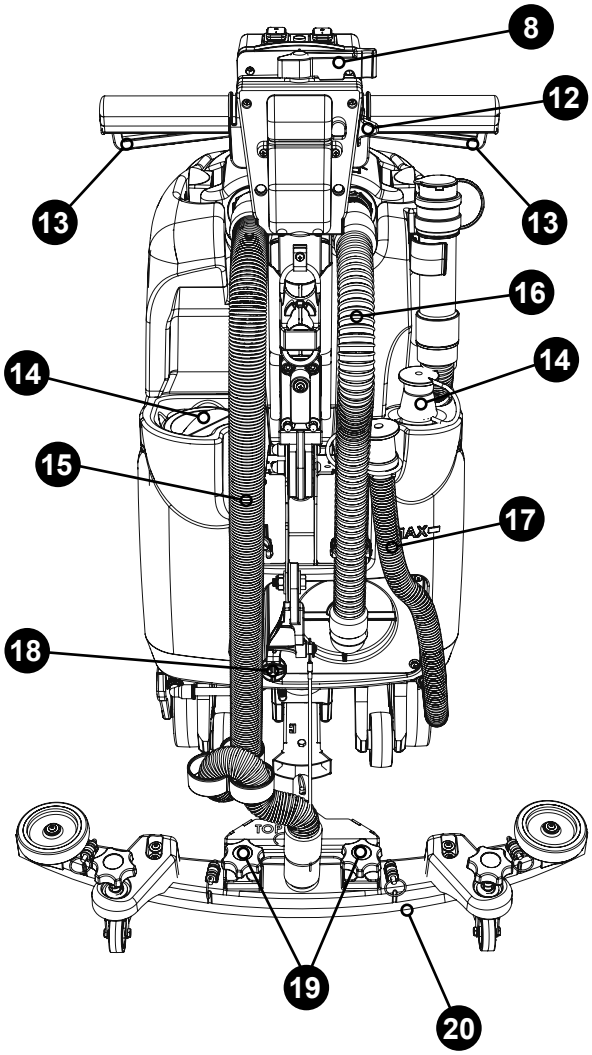

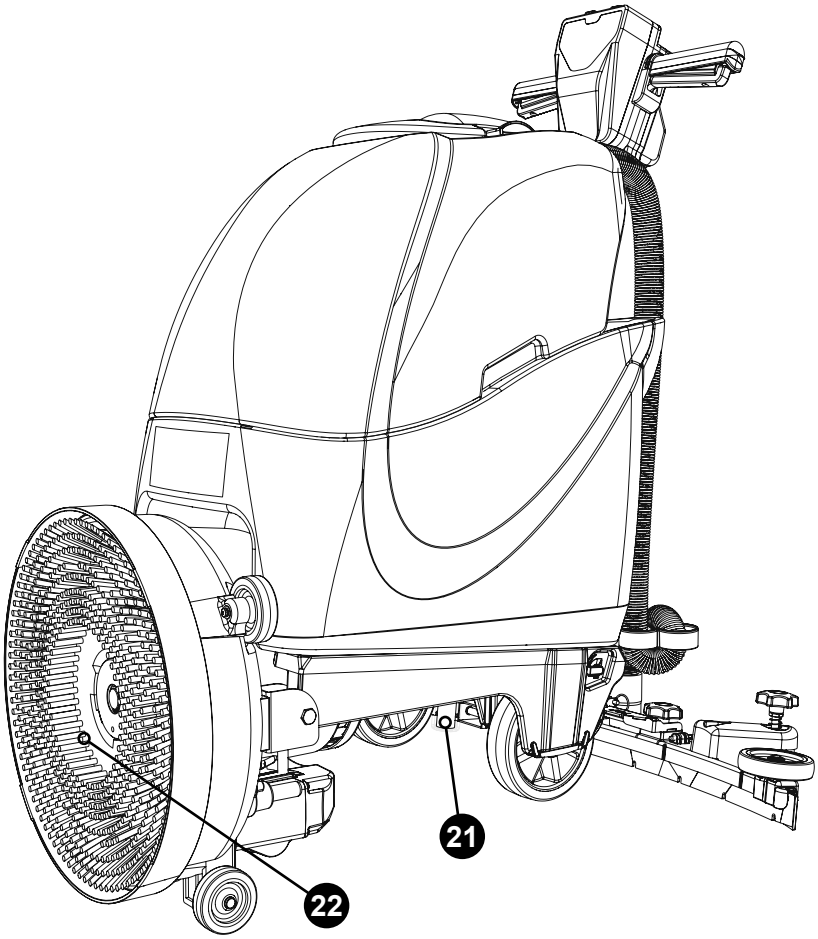

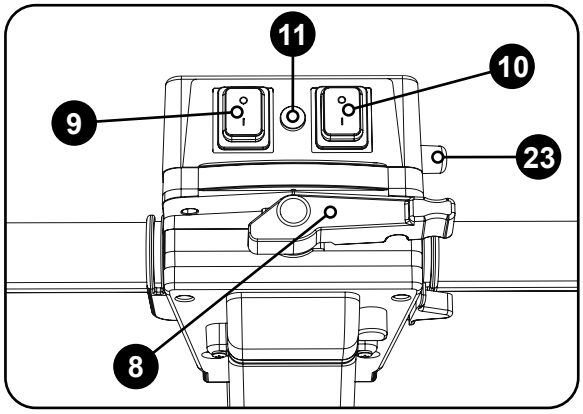

Machine Set-up Guide

PLEASE READ BEFORE COMMENCING ANY OPERATION AFTER THE REMOVAL OF ALL THE PACKAGING, CAREFULLY OPEN AND CHECK THE CONTENTS.

Handle Height Adjustment

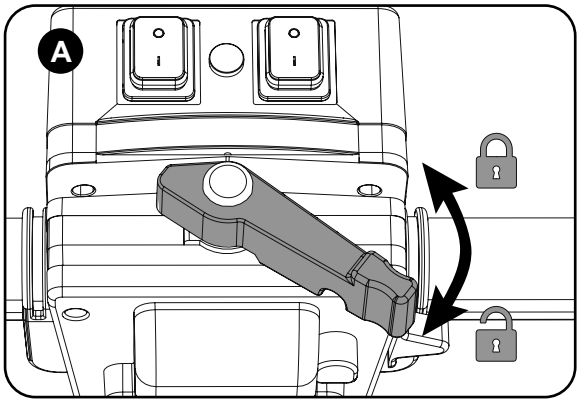

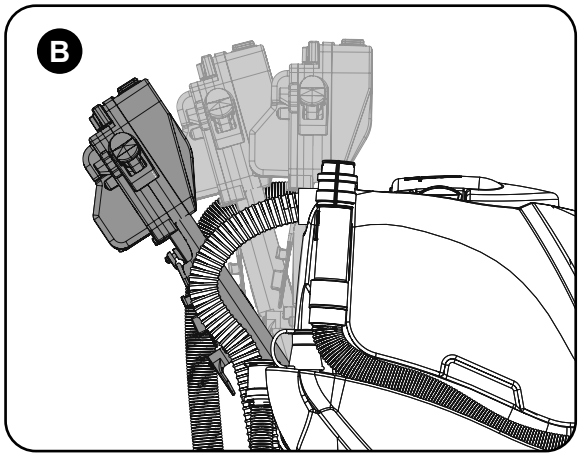

Using the handle position lever (Fig A)

Lower the handle to a comfortable working position (Fig B).

Fitting the Top Tank

Fit the top tank to the machine (Fig C).
Fit both vacuum and floor-tool hose to the separator (Fig D).

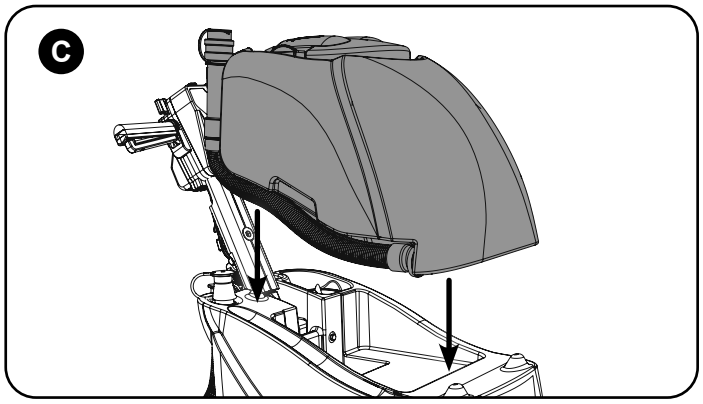

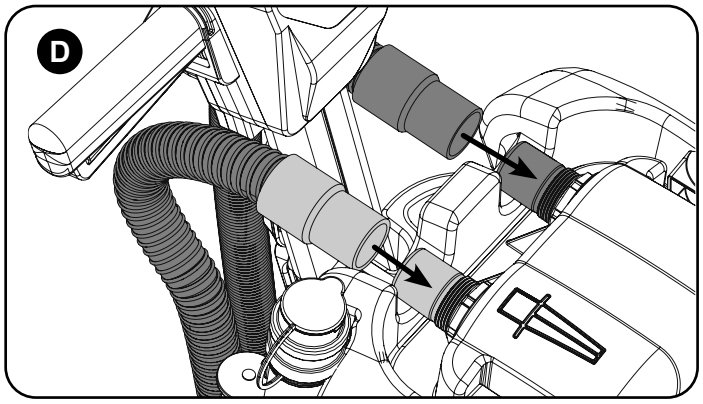

Fitting the Brush / Pad

HT4045/TT4045G require a 450mm brush or a 400mm pad.
TT4055G requires a 550mm brush or a 500mm pad.

Featuring the Nuloc brush system (Fig F).
The brush is simply pushed and twisted to lock, making fitting and removal a simple process.
The Pad is retained using Numatic's own PadLoc system (Fig E) (ask your supplier for details).
Only use manufacturer supplied brushes / pads.
Fit the brush / pad onto the Nuloc drive chuck, twist to lock the brush / pad in place. (Fig G).

Safety gloves are recommended for the changing of used brushes.

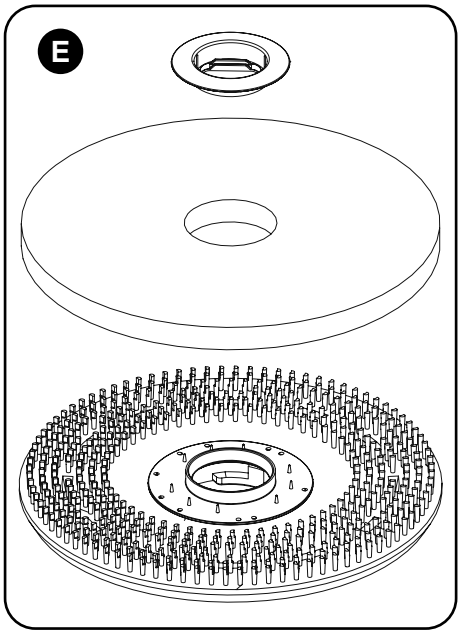

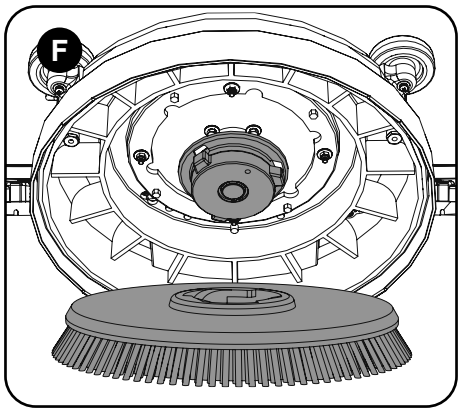

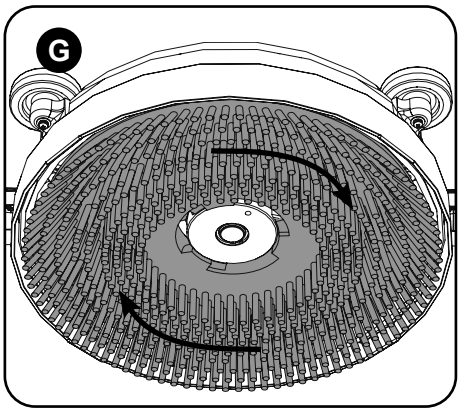

ALWAYS ENSURE THAT THE MACHINE IS SWITCHED OFF BEFORE MAKING ANY ADJUSTMENTS

Raising/Lowering the Brush Deck

To tip the deck into the down position (Operating mode).
Press in the brush deck locking pin (Fig H) and rotate the brush deck (Fig I & J).
To change to brush deck up position, (Transit mode) simply lift the deck and the spring loaded locking pin will activate to hold the deck up.

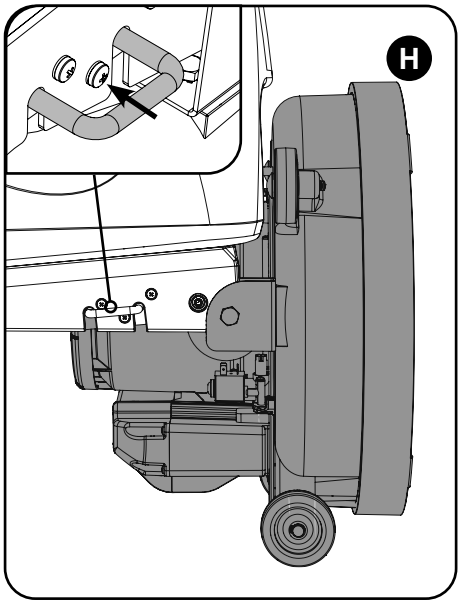

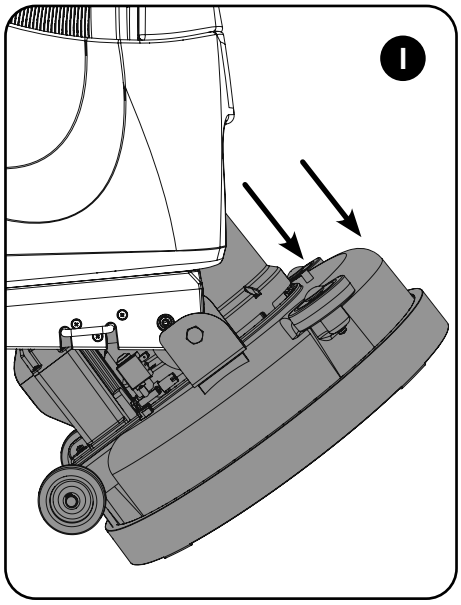

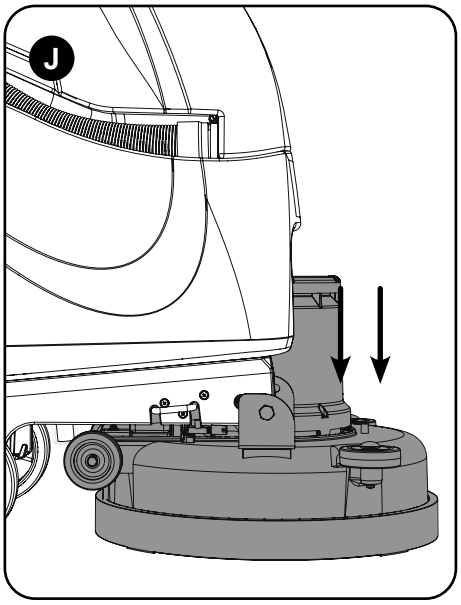

Fitting the Hose Guide

The vacuum hose has a U-bend clip which creates a
U-bend in the hose preventing water spillage when the vacuum is switched off.
If you need to remove the U-bend clip for any reason always ensure it is refitted correctly before you resume operation.

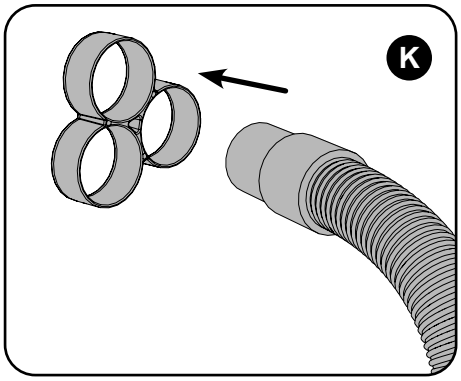

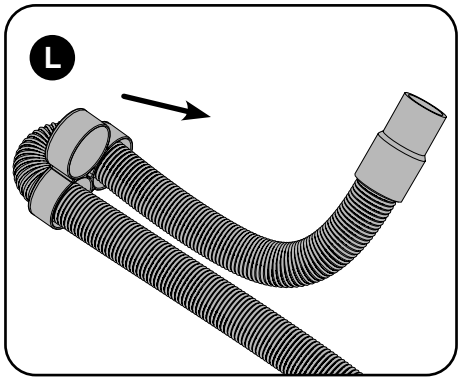

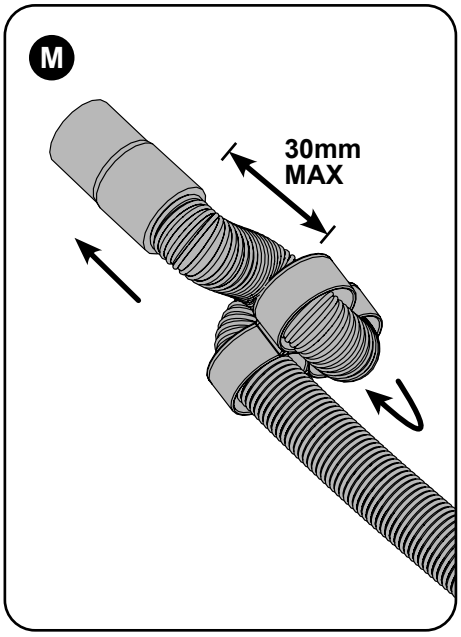

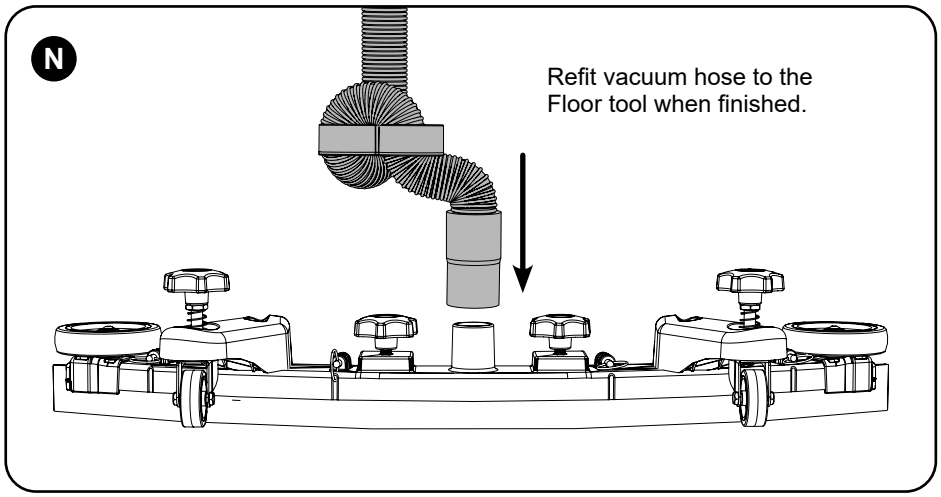

Note:
DO NOT push the vacuum hose onto the floor tool with the floor tool in the raised position.

Machine Set-up Guide

Fitting the Floor Tool

The floor tool has been designed for quick fitting, allowing easy squeegee blade replacement and a safety knock-off feature if the floor tool gets snagged, whilst in transit.

Note: It is easier to fit the floor tool if the weight of the machine is resting on the brush. Ensure the brush is fitted first.

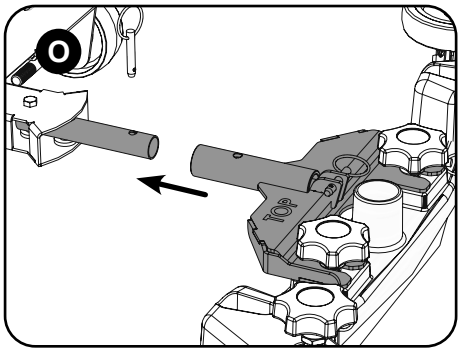

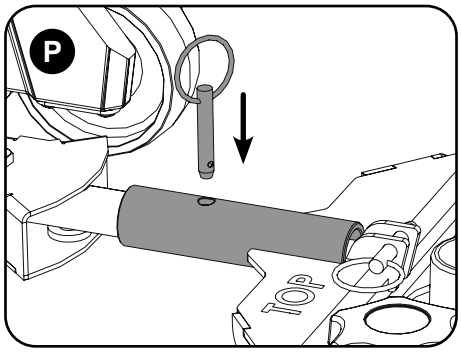

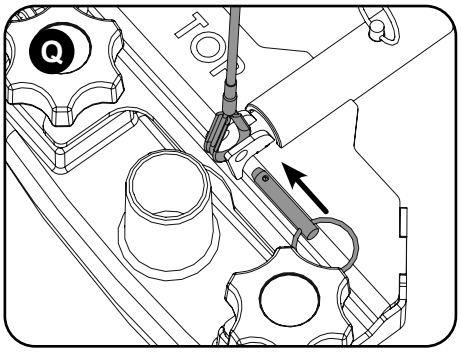

Fit the floor tool and retain using the detent pins. (Fig O, P & Q)

Push waste collection pipe onto the floor tool; ensure a tight fit. (Fig R)
Note: DO NOT push the vacuum hose onto the floor tool with the floor tool in the raised position.

Raise the floor tool for transit or lower for cleaning operation using the lifting handle fitted to the back of the machine. (Fig S)

For fitting the floor tool blades
(See Page 11).

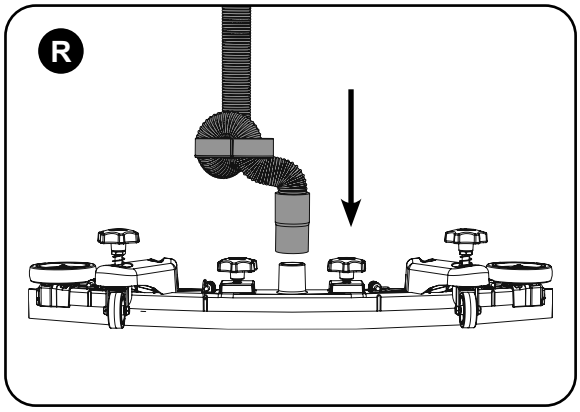

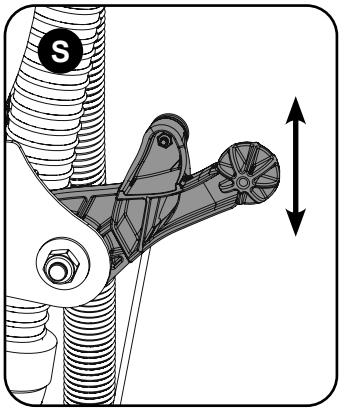

Filling the Clean-Water Tank

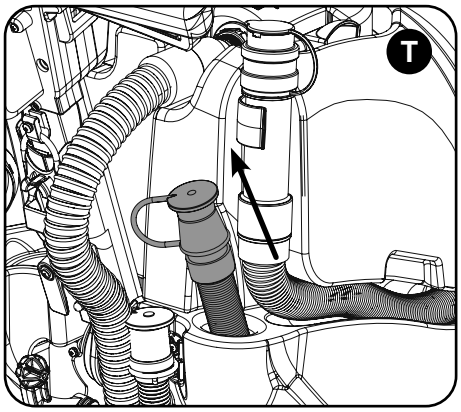

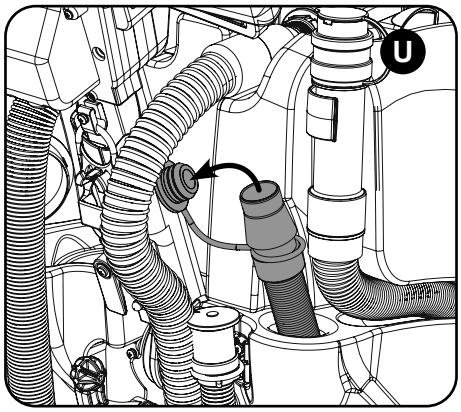

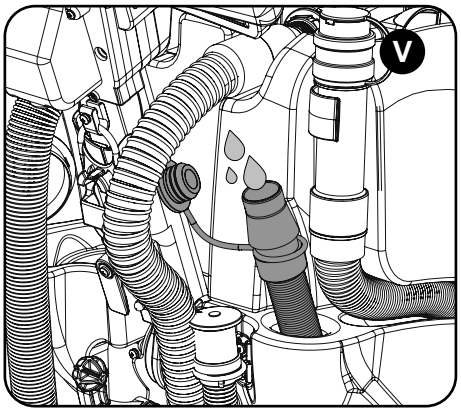

To fill the clean-water tank, use the FLEXI - FILL pipe from either a tap or hose pipe (Fig T, U &V).

The large cap on the left can also be used for filling from a bucket or suitable container (Fig W).

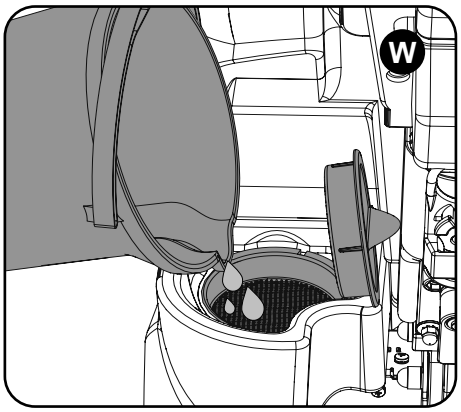

NOTE:
Great care must be taken to ensure that contaminants (leaves, hair, dirt, etc.) are not allowed to enter the clean water tank during the filling process.
If using a bucket or similar, ensure it is always clean and free from debris.

Fill Level Indicator

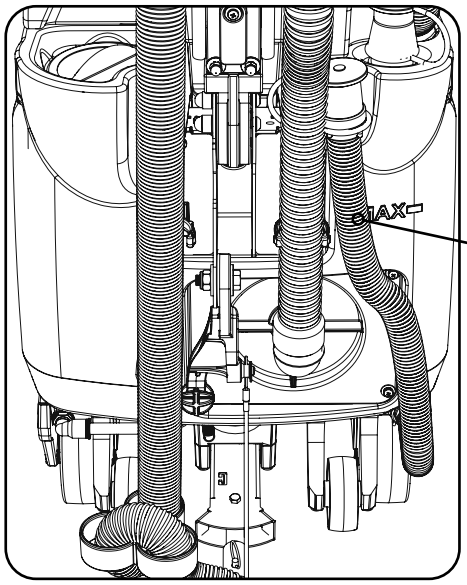

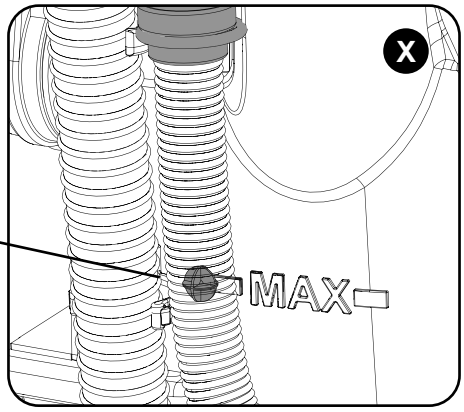

Fill the clean-water tank to MAX line indication on tank, including cleaning chemicals if required.

Follow chemical manufacturing guide lines.

The clear dump hose at the rear of the machine can be used to see the level of the clean-water (Fig X).

Control of Substances Hazardous to Health (COSHH)

For best results use a non-foaming type of chemical recommended for use in auto scrubber dryers, dilute to the manufacturers specification. For further guidance on hazardous substances refer to health and safety instructions online.

WHEN HANDLING AND MIXING CHEMICALS
Always ensure that chemical manufacturer's safety guidelines are followed.
Only use chemicals recommended for use in auto scrubber-dryers.

Water Flow Adjustment

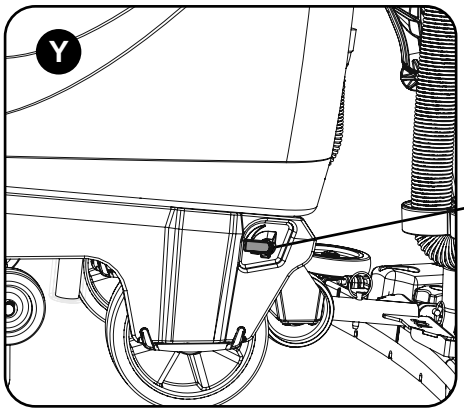

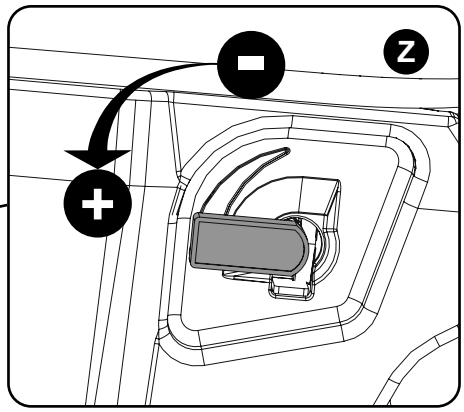

Turn on the clean-water tap. (Fig Y)

Adjust water flow using the fluid control tap. (Fig Z)

Reset Switch (100-120V Only)

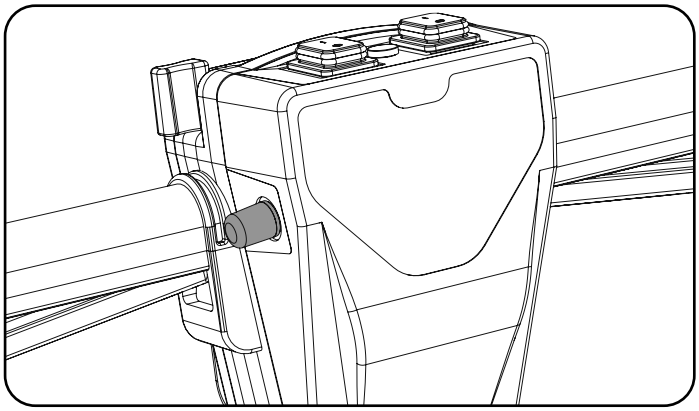

Press re-set switch to reset machine after trip out.

IMPORTANT

Do not operate machine unless the Operator Manual has been read and fully understood.

The machine is now ready to be moved to the cleaning site.
Before performing the cleaning operation, place out appropriate warning signs and sweep or dust-mop the floor.

Machine Operation

ALWAYS ENSURE THAT THE FLOOR IS PRE-SWEPT AND RELEVANT SAFETY SIGNS ARE DISPLAYED.

Lowering the Floor Tool

After preparing the floor (see previous section), we are now ready to set the controls to suit the cleaning conditions.

Before any settings can be applied, ensure the brush deck is lowered.

Move the floor tool lever to its lower position. (Fig A & B)

Note: Do not pull the machine backwards with the floor tool in the lowered position, this could possibly damage the blades.

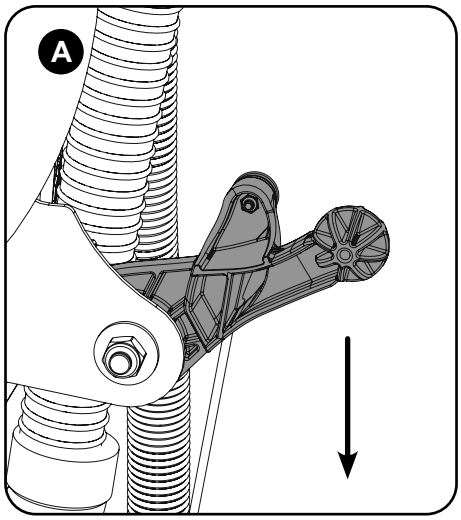

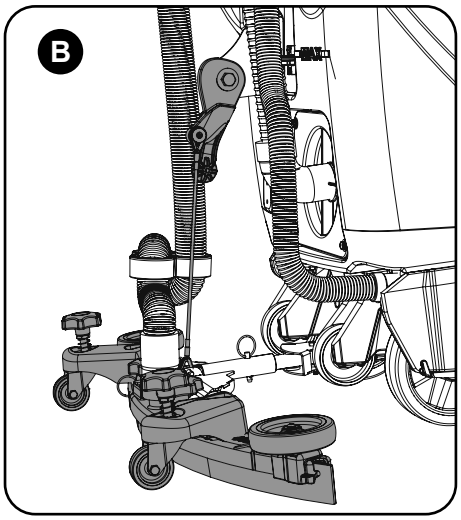

Break-away Floor Tool

The floor tool design incorporates a break-away feature.

Allowing it to safely disengage from its mounting should it become caught on an obstruction, during forward machine movement.

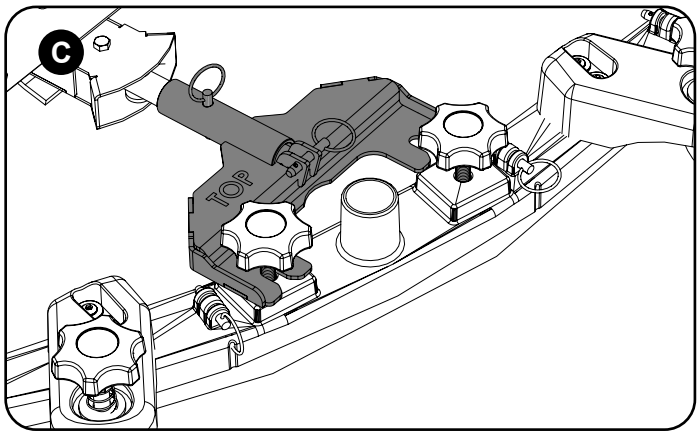

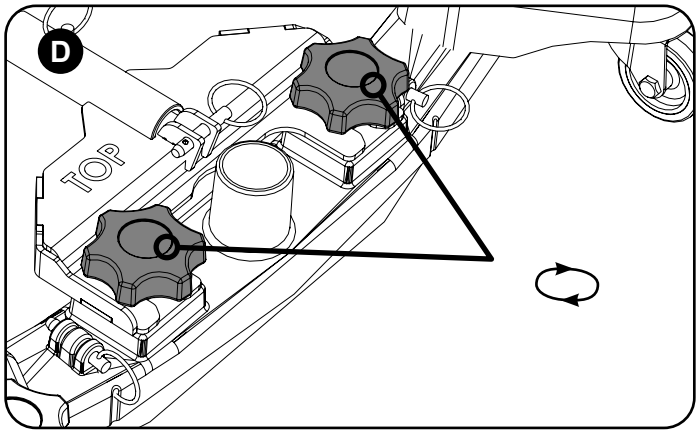

To re-attach the blade to its holder:

First loosen the retaining knobs on the floor tool body and slide onto the holding bracket. (Fig C)

Tighten retaining knobs to finger tight. (Fig D)

Pre-scrub Mode

On heavily soiled floors use a ‘double scrub’ technique.

First pre-scrub the floor with the floor-tool in the raised position, allow the chemical time to work, then scrub the area a second time with the floor-tool lowered.

Setting the Cleaning Controls

Ensure your TT machine has been plugged into a suitable power supply. (Fig E)

Switch on the Vacuum (F) and the water pump (G).

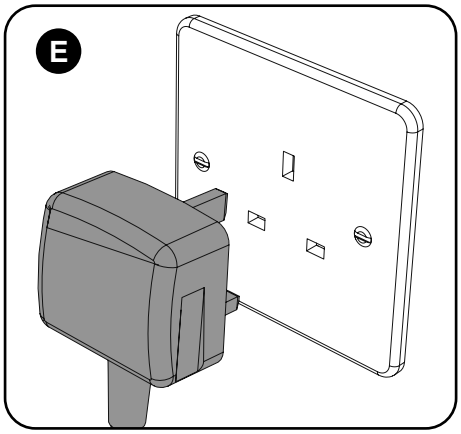

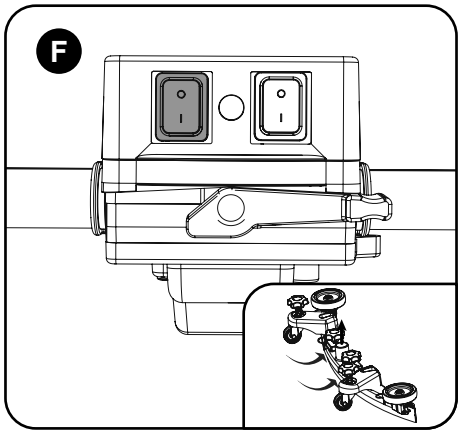

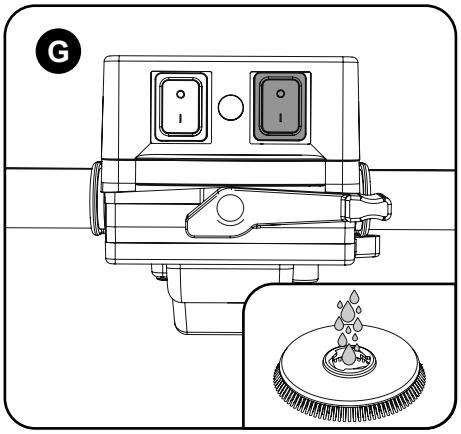

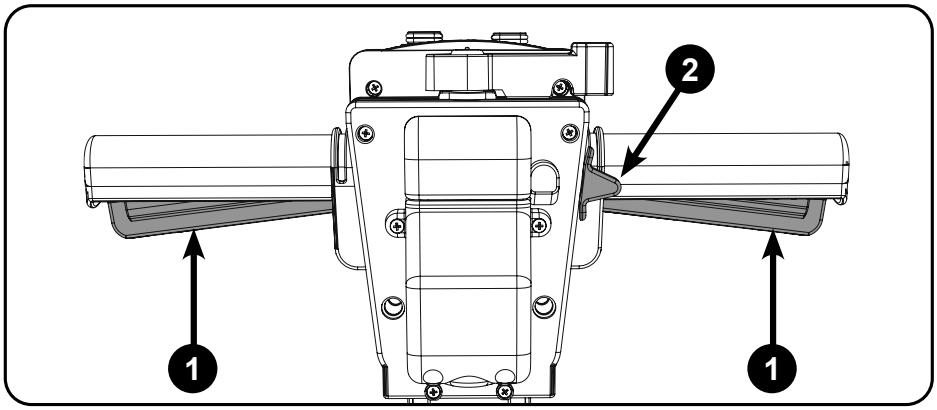

To operate the machine squeeze lever (1), then press yellow lever (2).

Releasing the Levers (1) will stop the machine.

Floor-tool in use

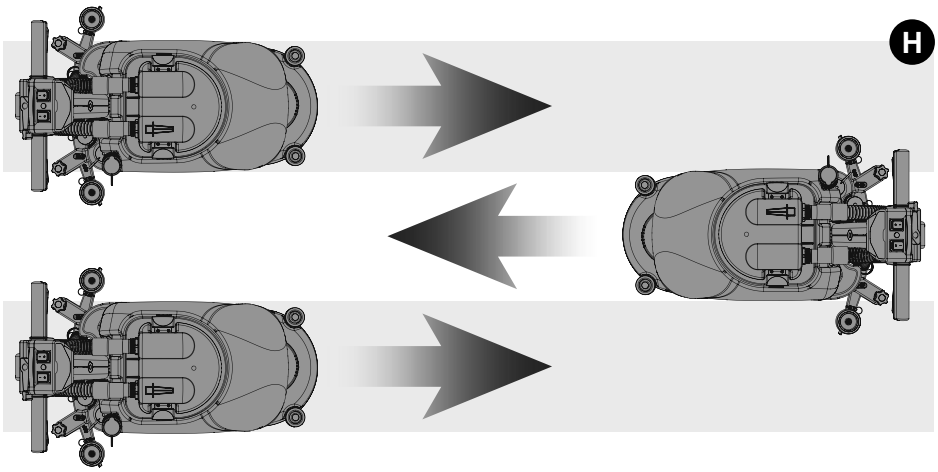

The clean-water / chemical mix is dispersed via the 'THRU-FEED' system.

The waste water is then retrieved by the floor-tool.

Overlap the scrubbing path by 10cm to ensure an even clean (Fig H).

If streaking occurs, wipe the floor-tool blades clean (Fig I).

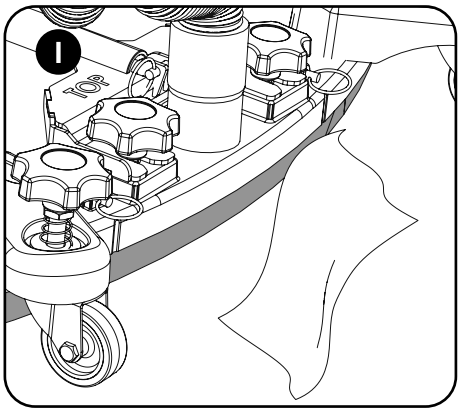

NOTE:
Care must be taken to reduce speed when cornering or when manoeuvring around obstacles

Regular Maintenance

ALWAYS ENSURE THAT THE MACHINE IS SWITCHED OFF PRIOR TO MAINTENANCE.

Scan for Daily Maintenance Poster

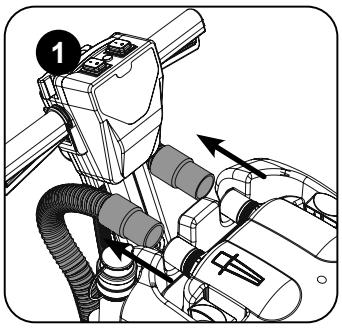

Remove the two hoses to disconnect the separator from the machine (Fig 1).
Whilst pulling the top tank separator toggles up and inwards, remove the separator. (Fig 2)
The separator has a sealing rubber which should be examined at every clean-down.
Rinse the separator using clean water, remove the vac filter, clean and inspect for any damage. (Fig 3)

IMPORTANT
Never use the machine without the recommended filter as it may cause damage to the machine.
Remove debris basket filter and rinse using clean water, and refit. (Fig 4)

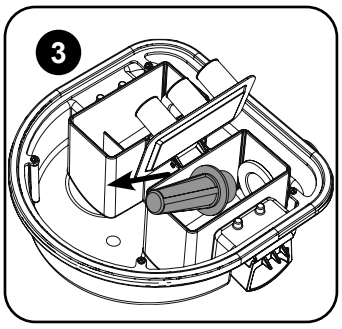

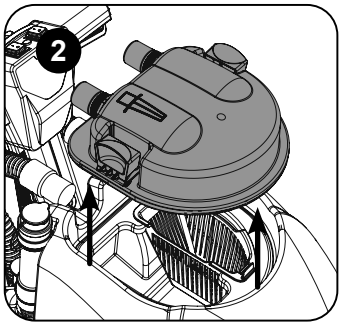

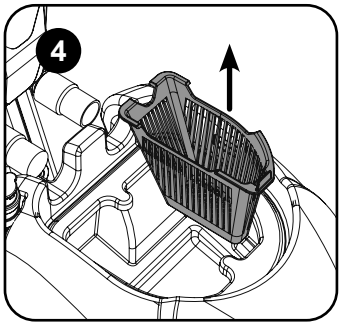

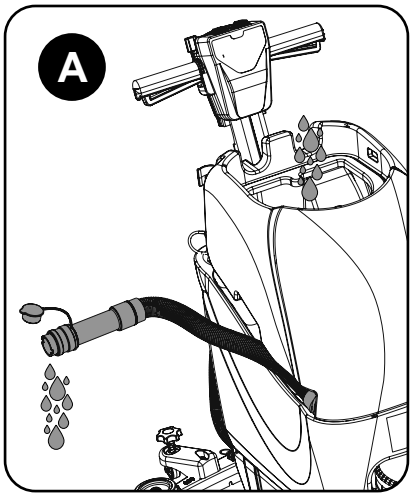

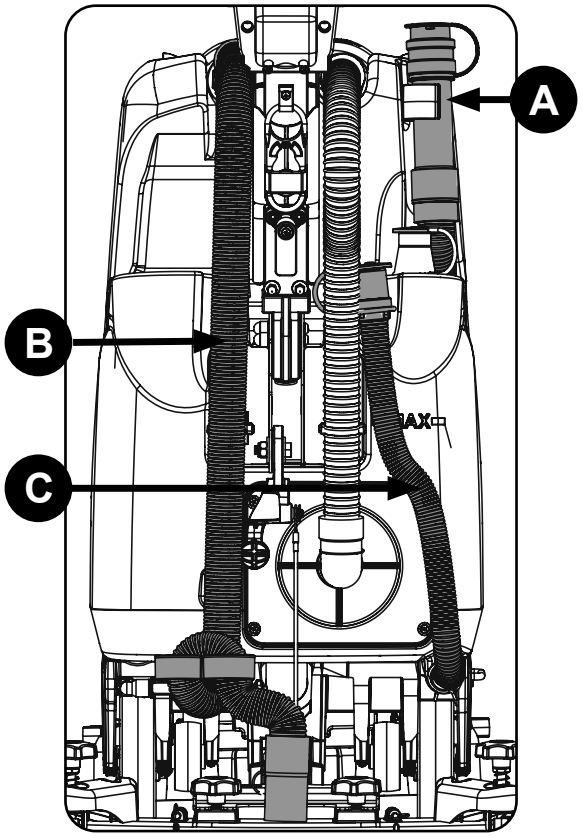

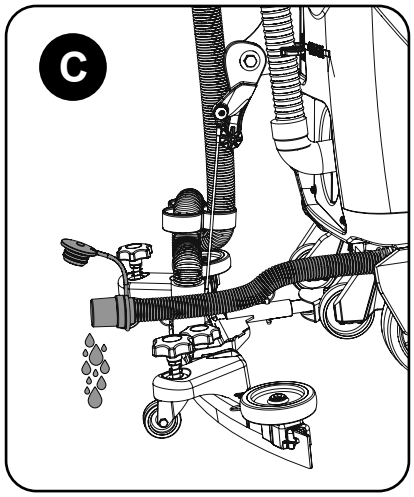

A After use, empty waste water tank using emptying hose and flush out with clean water.

B Next remove floor tool vacuum hose and flush out with clean water.

C Next empty clean water tank, using emptying hose and again flush out with clean water.

IMPORTANT
If the debris basket is allowed to become clogged, vacuum performance can deteriorate.

Located under the left hand side is a clean water filter, make sure the clean water tank is empty before removing this filter.

Note: To make access easier, raise the brush deck.

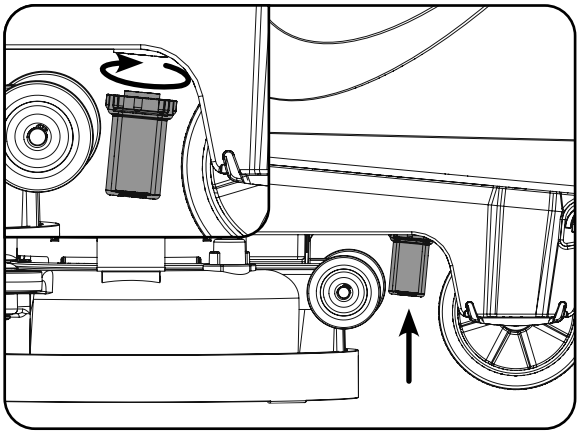

Changing the Floor Tool Blades

ALWAYS ENSURE THAT THE MACHINE IS SWITCHED OFF PRIOR TO MAINTENANCE.

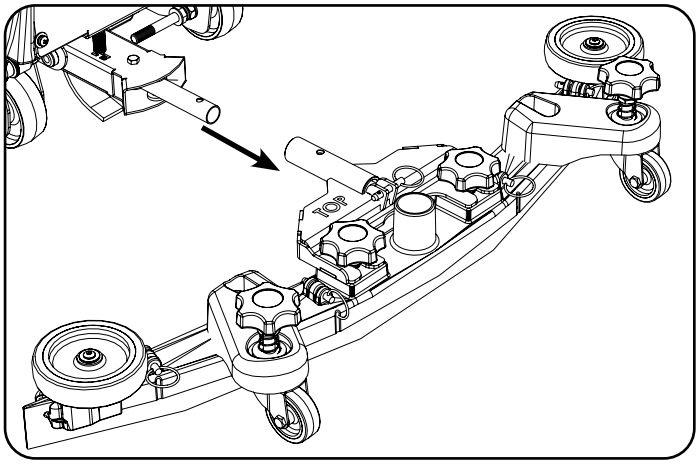

To clean the floor tool, remove securing-pin and pull-free from the holder.
Rinse the floor tool assembly with clean water and refit.

Periodically the floor tool blades should be examined and checked for wear and damage.

The blade removal is easy. Simply start by removing the four retaining pins, turn the floor tool over and separate the blade carrier from the body.

Peel away the blades from their locating lugs and examine or renew as required.

Replacement is a reversal of the removal process.

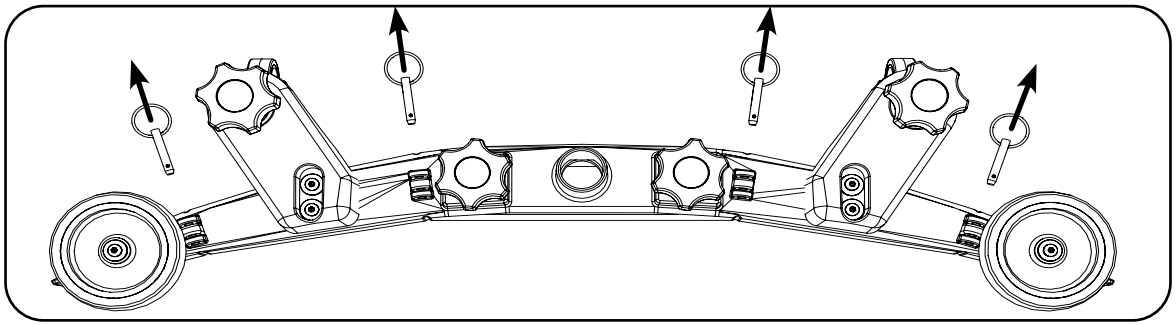

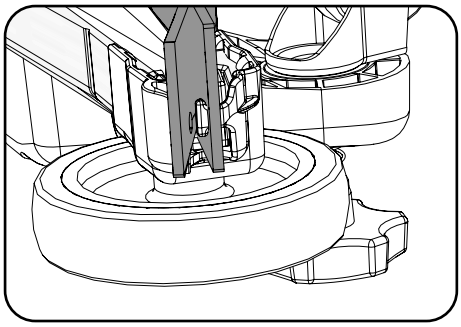

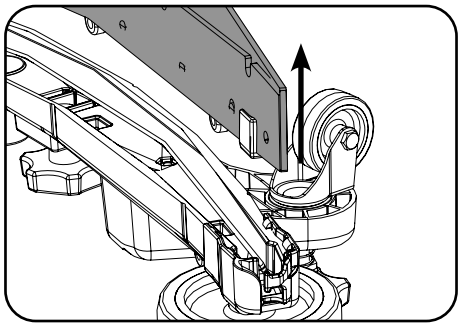

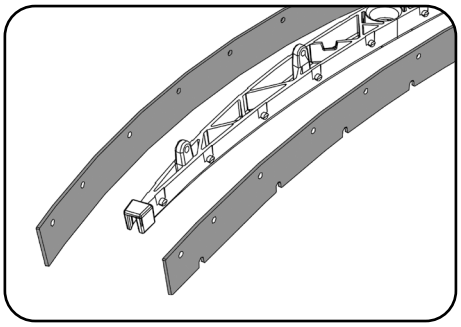

Floor Tool Overview

1. Retaining pins x 4
2. Front blade (slotted)
3. Blade carrier
4. Rear blade
5. Floor tool main body

Note: The blades are designed to be reversible, thus extending their useful working life.

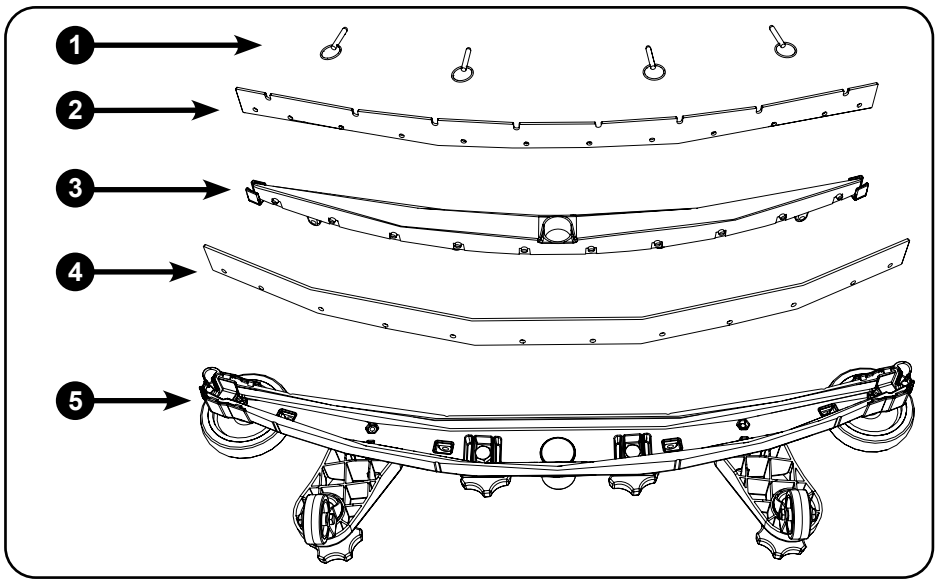

Specifications

HT4045 & TT4045G							
Brush Motor	Brush Sizes	Pad Sizes	Brush Pressure	Pad Pressure	Brush Weight	Brush Speed	
1500 W	450 mm	400 mm	21 - 25 g/cm^2	27 - 31 g/cm^2	34 - 39 kg	150rpm @ 50Hz	180rpm @ 60Hz
Protection Class	Water Capacity	Fluid Flow	Cleaning Range	Cleaning Area	Hand Arm Vibration	Sound Pressure (Lpa)	
IPX4	40 L	0 - 2 L/Min	42m 32m (Swiss only)	800m^2/HOUR @ 2.0kph	1.3m/s^2	76dB(A) Uncertainty (KpA) ± 3dB	
Nett Weight				Gross Weight (Full)			
62 kg				102 kg			
Squeegee Length	Dimensions						
805mm	Width = 470mm (805mm) / Length = 890mm (1065mm) / Height = 1100mm						
Power- 100-120V 50-60Hz				Power- 220-240V 50-60Hz			
Vac Motor Max Power				Vac Motor Max Power			
800W				1200W			

TT4055G							
Brush Motor	Brush Sizes	Pad Sizes	Brush Pressure	Pad Pressure	Brush Weight	Brush Speed	
1500 W	550 mm	500 mm	16 - 19 g/cm^2	19 - 22 g/cm^2	38 - 44 kg	150rpm @ 50Hz	180rpm @ 60Hz
Protection Class	Water Capacity	Fluid Flow	Cleaning Range	Cleaning Area	Hand Arm Vibration	Sound Pressure (Lpa)	
IPX4	40 L	0 - 2 L/Min	42m 32m (Swiss only)	970m^2/HOUR @ 2.0kph	1.3m/s^2	76dB(A) Uncertainty (KpA) ± 3dB	
Nett Weight				Gross Weight (Full)			
64 kg				104 kg			
Squeegee Length	Dimensions						
944mm	Width = 560mm (944mm) / Length = 935mm (1110mm) / Height = 1100mm						
Power- 100-120V 50-60Hz				Power- 220-240V 50-60Hz			
Vac Motor Max Power				Vac Motor Max Power			
800W				1200W			

Face Fitting

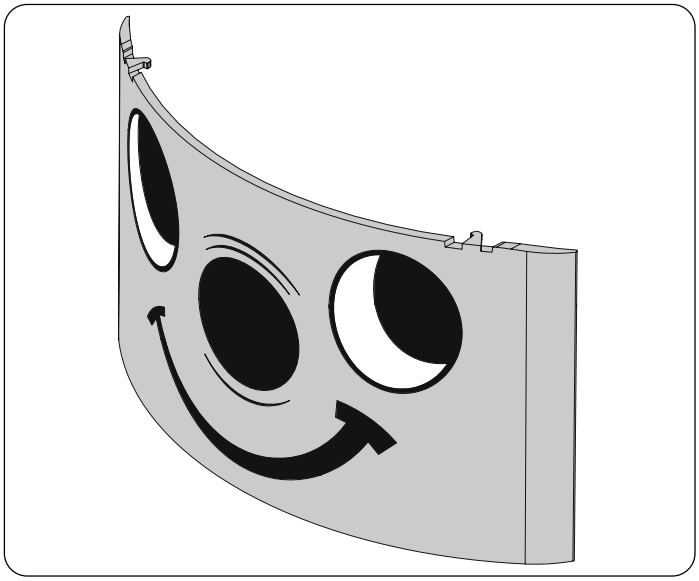

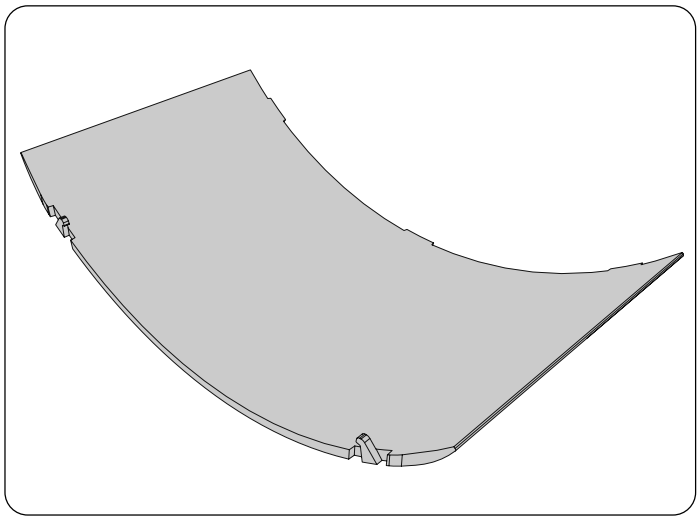

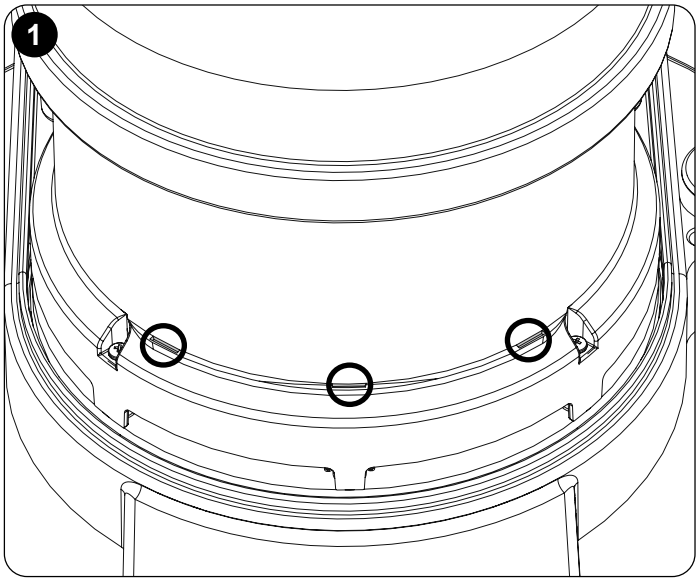

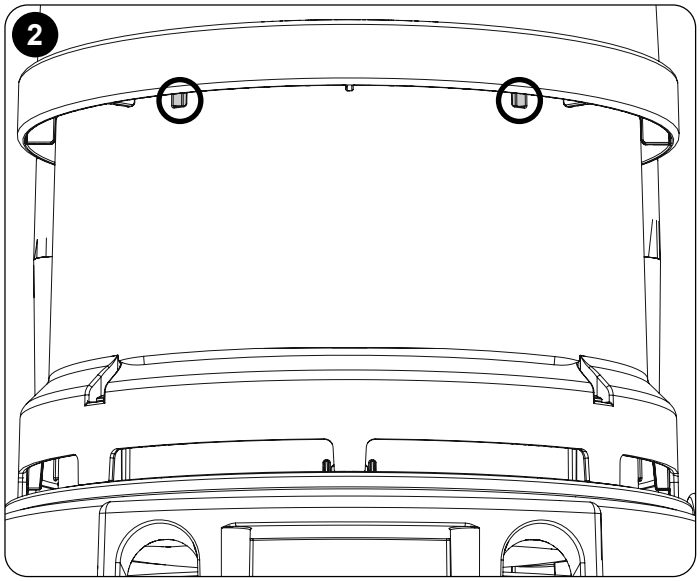

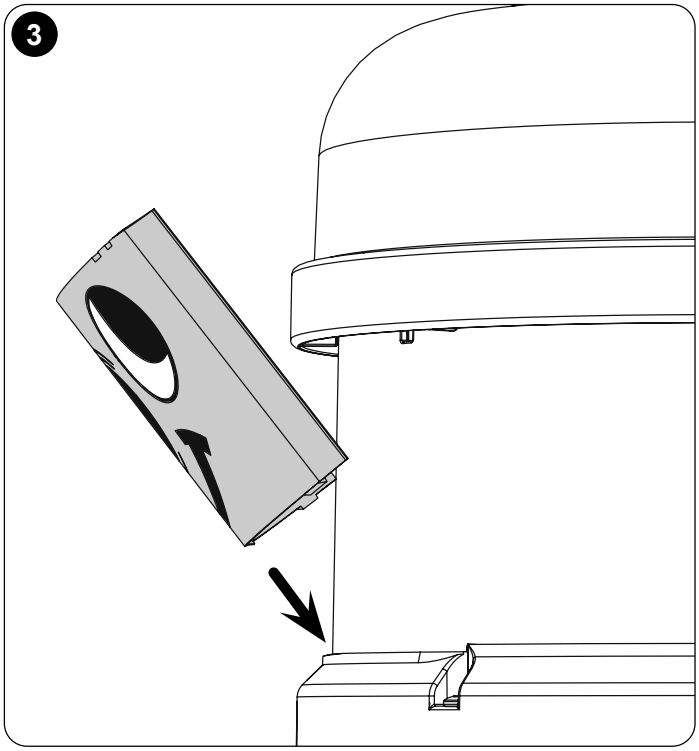

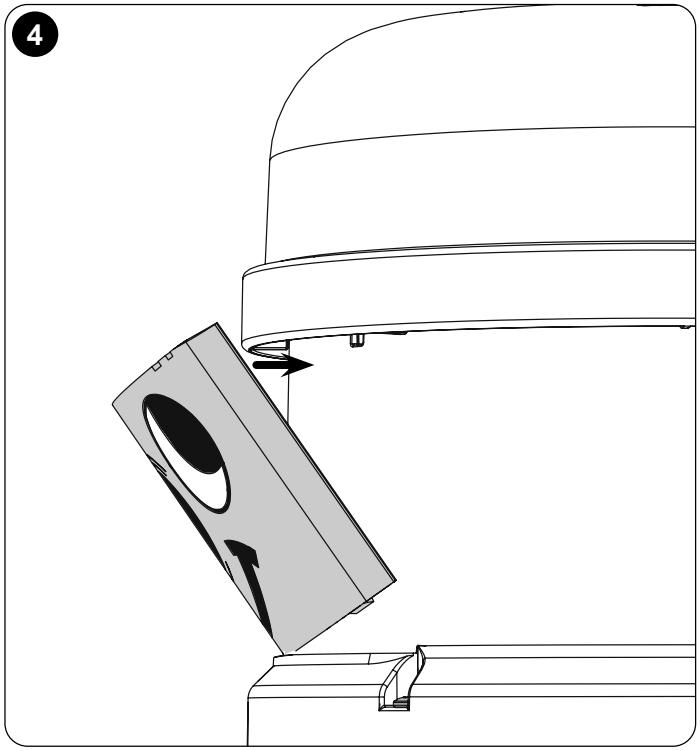

Face Fitting

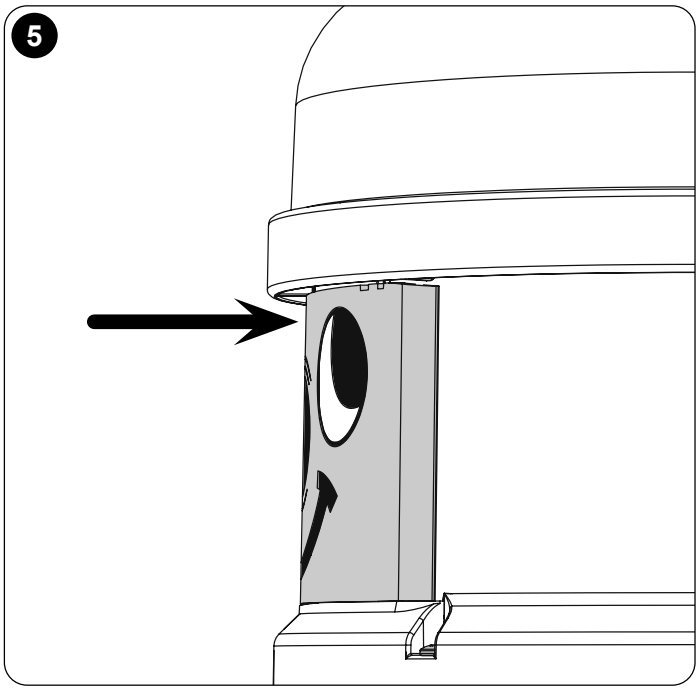

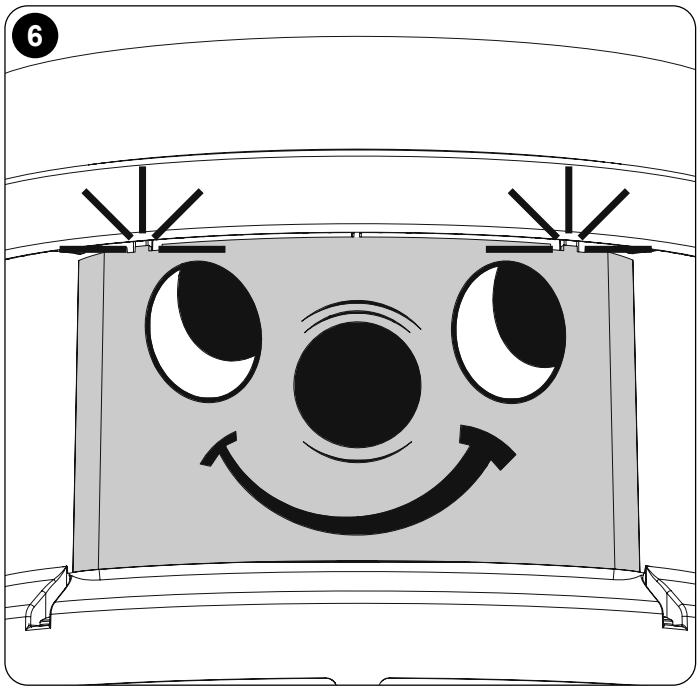

Schematic Diagram

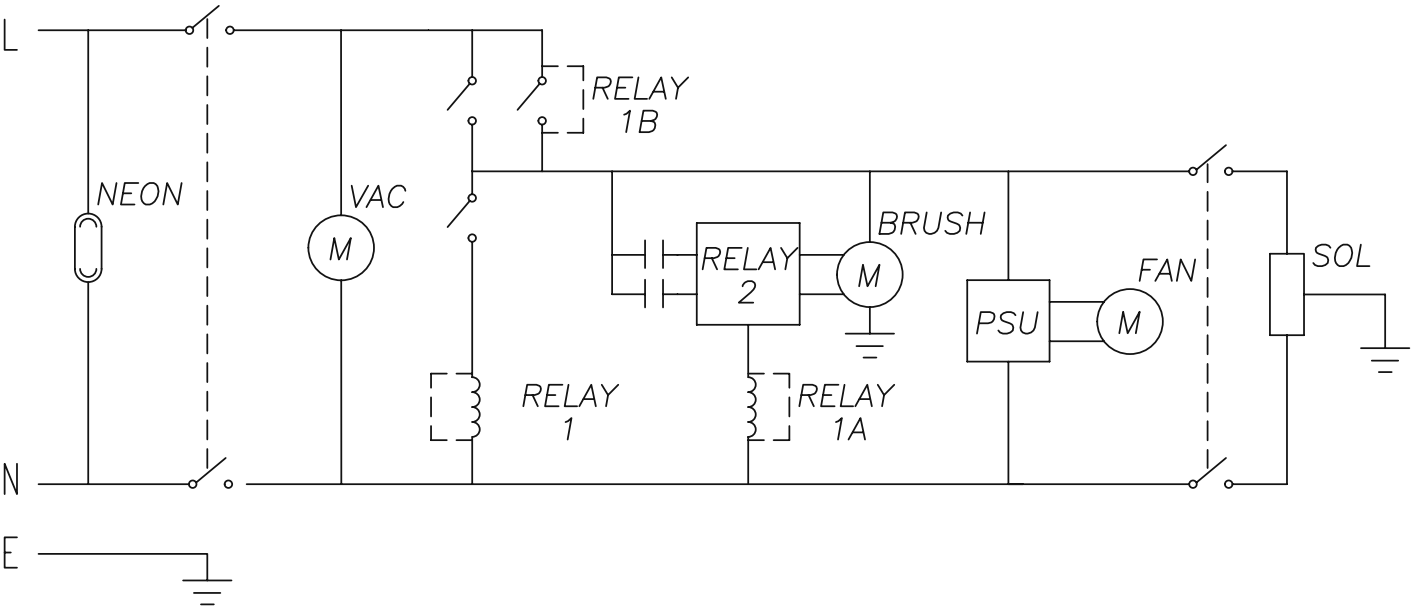

TwinTec Maintenance

Daily
Keep the machine clean.
Ensure brushes / pads / squeegee / filters are in good condition.
Check for any worn or damaged parts and replace immediately.
Drain and rinse dirty water tank after every use.

Weekly – as daily and –
Check brush / pad and deck skirt, wipe and rinse.
Check floor tool blades for wear and wipe clean.
Clean separator assembly including filter and check condition of seal.
Flush out system with clean water and clean filters.

Rating Label	
1	Company Name & Address
2	Machine Description
3	Voltage Frequency
4	Power Rating
5	Noise Emission
6	Hand Arm Vibration
7	Ingress Protection Rating
8	Weight (Ready to Use)
9	Approval Mark(s)
10	WEEE symbol
11	EU Importers info
12	Max Gradient
13	Machine yr/wk Serial number

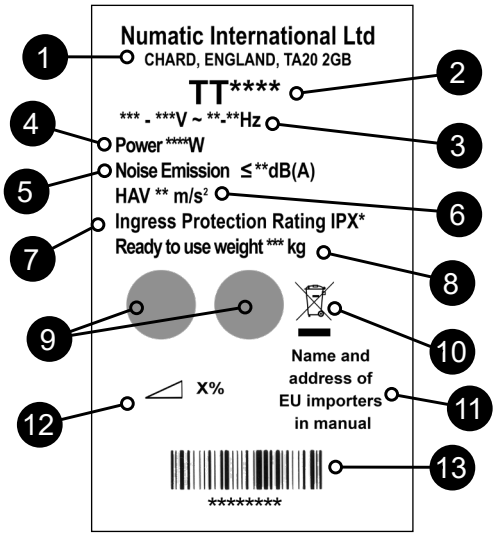

WEEE (Waste, Electrical and Electronic Equipment)
Scrubber dryer Accessories and packaging should be sorted for environmentally-friendly recycling.
Only for UK & EU countries.
Do not dispose of scrubber-dryer into household waste.
According to the European Directive 2012/19/EU on waste electrical electronic equipment and its incorporation into national law.
Scrubber-dryers that are no longer suitable for use must be separated, collected and sent for recovery in an environmentally-friendly manner.

PPE (Personal protective equipment) that may be required for certain operations.

Ear Protection	Safety Footwear	Head Protection	Safety Gloves	
Dust / Allergens Protection	Eye Protection	Protective Clothing	Hi-Vis Jacket	Caution Wet Floor Sign

Note: A risk assessment should be conducted to determine which PPE should be worn.

Safety Critical Component:

Mains lead:
H05VV-F 20m x 3 Core x 1.5mm²

In the event of a breakdown contact your Numatic dealer or the
Numatic Technical
Helpline +44 (0)1460 269268

Information for Scrubber Dryer

READ MANUAL BEFORE USE

COMPONENT	INTERVAL	INSPECT FOR
Mains Lead	DAILY	Scuffing, cracks, splits, conductors showing
Brushes	DAILY	Bristle damage, wear, drive collar wear
Squeegee Blade	BEFORE EACH USE	Wear, cracks, splits
Filters	BEFORE EACH USE	Clogging and debris retention
Tanks	AFTER EACH USE	Rinse dirty water tank after use

WARNING

As with all electrical equipment care and attention must be exercised at all times during its use, in addition to ensuring that routine and preventative maintenance is carried out periodically in order to ensure its safe operation. Operators shall be adequately instructed as to the correct use of the machine.

Failure to carry out maintenance as necessary, including the replacement of parts to the correct standard could render this equipment unsafe and the manufacturer can accept no responsibility or liability in this respect.
When ordering spare parts always quote the Model Number / Serial Number specified on the Rating Plate.
Do not use on cleaning surfaces having a gradient exceeding that marked on the machine. While on ramps or inclines, avoid sudden stops. Avoid sharp turns. Use low speed down ramps. Clean only while descending (driving down) the ramp.

This machine is not intended for use by persons (including children) with reduced physical, sensory or mental capabilities, or lack of experience and knowledge. Children should be supervised to ensure that they do not play with the appliance.

Only use brushes provided with the appliance or those specified in the instruction manual.
The use of other brushes may impair safety.
A full range of brushes and accessories are available for this product.
Only use brushes or pads which are suitable for the correct operation of the machine for the specific task being performed.

It is essential that this equipment is correctly assembled and operated in accordance with current safety regulations.
When using the equipment always ensure that all necessary precautions are taken to guarantee the safety of the operator and any other persons who may be affected.
Wear nonslip footwear when scrubbing. Use a respiratory mask in dusty environments.

When cleaning, servicing or maintaining the machine, replacing parts or converting to another function the power source shall be switched off. Mains operated machines shall be disconnected by removing the power plug, and battery operated machines shall be disconnected by using top ON/OFF button on the battery.

Machines left unattended shall be secured against unintentional movement.
When detergents or other liquids are used, read the manufacturer's instructions.
Do not allow the supply cord to come into contact with the rotating brushes or pads.

CAUTION

This machine is not suitable for picking up hazardous dust
This machine shall be stored indoors only
This machine is for indoor use only.

NOTES: This machine is intended for commercial use, for example in hotels, schools, hospitals, factories, shops, offices and rental businesses. This product meets the requirements of IEC 60335-2-72

DO

- Ensure only competent persons unpack/assemble the machine.
- Keep your machine clean.
- Keep your brushes in good condition.
- Replace any worn or damaged parts immediately.
- Regularly examine the power cord for damage, such as cracking or ageing. If the supply cord is damaged, it must be replaced by the manufacturer, its service agent or similarly qualified persons in order to avoid a hazard.
- Only replace the power cord with the correct Numatic approved replacement parts.
- Ensure that the work area is clear of obstructions and / or people.
- Ensure that the working area is well illuminated.
- Pre-sweep the area to be cleaned.

DON'T

- Use steam cleaners or pressure washers to clean the machine or use in the rain.
- Attempt machine maintenance or cleaning unless the power plug has been removed from the supply outlet.
- Allow any inexperienced repairs. Call the experts.
- Strain cable or try to unplug by pulling on cable.
- Leave the brush pad on the machine when not in use.
- Allow the machine to be used by inexperienced or unauthorised operators or without appropriate training.
- Use the machine without the solution tanks properly positioned on the machine, as shown in the instructions.
- Expect the machine to provide trouble-free, reliable operation unless maintained correctly.
- Run the machine over power cable during operation.
- Lift or pull the machine by any of the operating triggers, use the main handle.
- Remove the handle from the machine except for service and repair.

Off-Aisle Cleaning Kit (Optional Extra Accessory)

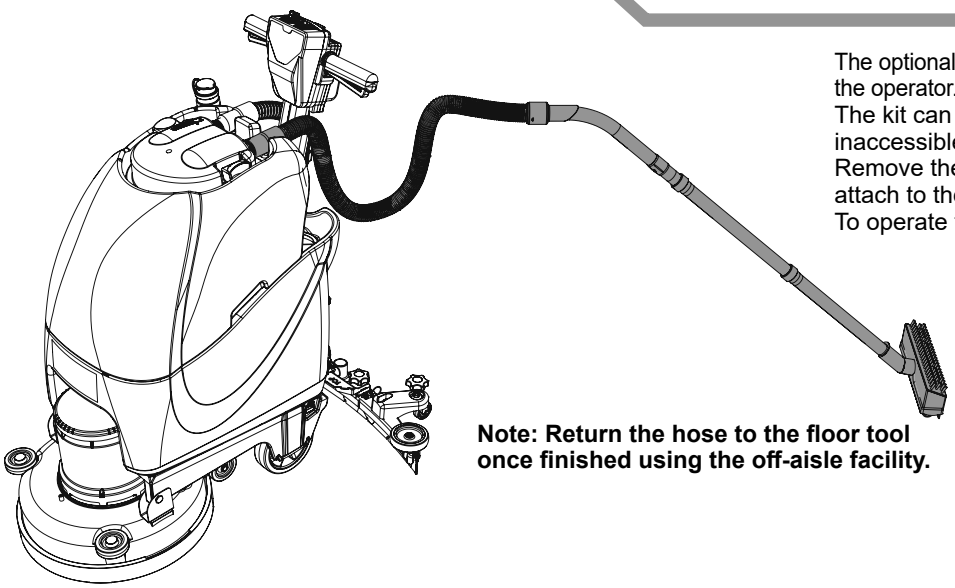

The optional off-aisle cleaning kit gives added flexibility to the operator.
The kit can be used to clean hard to reach / inaccessible areas.
Remove the vacuum hose from the floor tool and attach to the off-aisle kit.
To operate the vacuum, press the vacuum switch on.

Note: Return the hose to the floor tool once finished using the off-aisle facility.

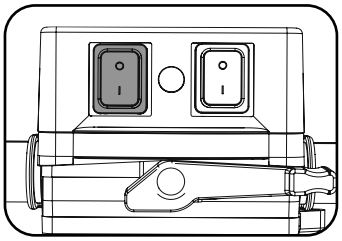

Trouble Shooting

PROBLEM	CAUSE	SOLUTION
Poor water pick-up	Waste-water tank full Clogged / blocked vacuum hose Loose hose connections Debris basket filter clogged / blocked Separator filter clogged / blocked Poor separator seal Damaged separator seal Damaged / split vacuum hose Damaged floor tool blades	Empty waste-water tank (page 10) Remove and clean Push tight connections Remove and clean (page 10) Remove and clean (Page 10) Clean and refit (page 10) Renew (contact service dept) Renew (contact service dept) Renew (contact service dept)
No brush / scrub function	No brushes fitted Brush deck raised	Check and fit (page 4) Lower brush deck (page 5)
Little or no water flow	Clean-water tank empty Clean-water tank filter blocked / clogged Brush deck raised Water flow not on	Fill clean-water tank (page 6) Remove and clean (page 10) Lower brush deck (page 5) Switch on water flow (page 7)

Spare Parts

Part No.	BRUSHES	Part No.	SQUEEGEE
606203	450MM POLYSCRUB BRUSH	900521	650 SEMI PARABOLIC SQUEEGEE (4045)
918294	450MM TEN-TEC BRUSH - CODE RED	900522	750 SEMI PARABOLIC SQUEEGEE (4055)
606204	450MM NYLOSCRUB BRUSH	900518	650 FLOOR TOOL BLADES - GREEN PU
606306	450MM LONGLIFE BRUSH	900519	750 FLOOR TOOL BLADES - GREEN PU
900525	400MM NULOC2 DRIVE BOARD	Part No.	CABLES
606401	400MM PADLOC DRIVE BOARD	911819	MAINS CABLE YELLOW - UK
606028	550MM POLYSCRUB BRUSH	236132	MAINS CABLE - EURO
918295	550MM TEN-TEC BRUSH - CODE RED	236020	MAINS CABLE - SWITZERLAND
606550	550MM NYLOSCRUB BRUSH	236024	MAINS CABLE - SOUTH AFRICA
606551	550MM LONGLIFE BRUSH	236028	MAINS CABLE - USA
900526	500MM NULOC2 DRIVE BOARD	236118	MAINS CABLE - INDUSTRIAL 16 AMP

Numatic International

Warranty

Numatic International Limited warrant to the original purchaser that its products are free of defects in both material or workmanship for the period shown below:-

Homecare and Cleancare Vacuum cleaners..... 2 Years
Rotary Floor Machines..... 2 Years
Twintec Auto Scrubber Dryer..... 1 Year
Vario Ride-On Scrubber Dryer..... 1 Year / 1500 hours
Mopping, Compacts, Combi and Servocare Products..... 1 Year
Individual Accessories and Spare Parts..... 6 Months

Note: This warranty expressly excludes consumable parts such as carbon brushes, floor brushes, mops, batteries etc, that are considered replaceable from time to time during the normal working life of the machine.

Using non Numatic dustbags can be detrimental to both machine performance and life and may invalidate the Warranty.

A. The warranty period commences from the date the goods are purchased.

B. All warranty claims must be processed through the Dealer from whom the equipment was purchased. The Dealer will co-operate with the purchaser throughout the warranty claims procedure and will arrange any necessary repairs using genuine Numatic parts.

C. If the original Dealer is no longer able to fulfil his obligations please contact Numatic International Limited with full details of the claim and proof of purchase so that this may be processed without delay.

D. Any warranty claim can only relate to the specific part that is proven to be at fault and for which a replacement will be supplied but cannot be extended to constitute a claim against the complete machine.

E. Numatic International will supply the Dealer with any warranty parts required, subject to the claim being validated, after return of the faulty items in accordance with Numatic International Limited's General Conditions of Sale.

F. Claims will not be accepted if they are the result of fair wear and tear, misuse or abuse of any kind.

G. No replacement will be given unless the appropriate evidence of the validity of the claim has been provided to the satisfaction of Numatic International Limited.

H. Numatic International Limited reserve the right to charge for any unnecessary work carried out as a result of an invalid claim.

I. No variation to this warranty may be made or implied by any member of Numatic International Limited or its Dealers unless such variation is in writing and authorised by the Company

Numatic

Numatic International Limited. Chard, Somerset, TA20 2GB
Telephone: 01460 68600 Fax: 01460 68458
© Numatic International Limited

UKCA Declaration of Conformity

Manufacturer:	Numatic International Limited Chard Somerset TA20 2GB www.numatic.co.uk
Product:	TT4045, HT4045, ET4045, TT4055, HT4055, ET4055
Description:	Floor Treatment – Walk Behind - Commercial

We, Numatic hereby declare under our sole responsibility, that the above-mentioned product(s) is/are in conformity with the following directives and standards.

S.I. 2008: 1597	**Supply of Machinery Regulations**	**EN60335-1:2012 + AC:2014 + A11:2014 + A13:2017 + A15:2021** **EN60335-2-72:2012** **EN62233:2008**
S.I. 2016: 1091	**EMC Regulations**	**EN55014-1:2017 + A11:2020** **EN55014-2:1997 + A1:2001 + A2:2008** **EN61000-3-2:2014** **EN61000-3-3:2013**
S.I. 2012: 3032	**RoHS Regulations**	

Authorised Signatory: Mr. Matthew Coles

Position: Head of Technology
Numatic International Limited,
Chard,
Somerset, TA20 2GB, UK

Signed: M Coles Date: 1st February 2024

DEC-003 V2.2

EU, EC, EL, UE, ES:
Declaration of Conformity
Prohlášení o shodě
Konformitätserklärung
Overensstemmelseserklæring
Declaración de conformidad
Vastavusdeklaratsioon
Déclaration de conformité
Декларация за съответствие
Δήλωση συμμόρφωσης
Megfelelőségi nyilatkozat
Dichiarazione di conformità
Atitikties deklaracija
Conformiteitsverklaring
Samsvarserklæring
Declaração de conformidade
Deklaracja zgodności
Declaratie de conformitate
Декларация о соответствии
Försäkran om överensstämmelse
Izjava o skladnosti
Vaatimustenmukaisuusvakuutus

Manufacturer: / Výrobce / Hersteller / Fabrikant / Fabricante / Tootja / Fabricant / производитель / Κατασκευαστής / Gyártó / Fabbricante / Gamintojas / Fabrikant / Produsent / Fabricante / Producent / Producător / производитель / Tillverkare / Proizvajalca / Valmistaja:	Numatic International Limited Chard Somerset TA20 2GB www.numatic.co.uk
Product: / Produkt / Produkt / Produkt / Producto, Toodet, Produit / Продукт / Προϊόν / Termék / Prodotto / Produktas / Artikel / Produkt / Produtos / Produkt / Produs / товар / Produkt / Izdelka / Tuote:	TT4045, HT4045, ET4045, TT4055, HT4055, ET4055
Description: / Popis / Beschreibung / Beskrivelse / Descripción / Kirjeldus / La description / Описание / Περιγραφή / Leirás / Descrizione / Apibudinimas / Omschrijving / Beskrivelse / Descrição / Opis / Descriere / Описание / Beskrivning / Opis / Kuvaus:	Floor Treatment – Walk Behind – Commercial

EN **We, Numatic hereby declare under our sole responsibility, that the above-mentioned product(s) is/are in conformity with the following directives and standards.**

CS My, Numatic prohlašujeme na svou výlučnou odpovědnost, že výše uvedený výrobek je ve shodě s následujícími směrnicemi a normami.

DE Wir, Numatic erklären in alleiniger Verantwortung, dass das oben genannte Produkt den folgenden Richtlinien und Normen entspricht.

DA Vi, Numatic erklærer hermed under eget ansvar at ovennævnte produkt(er) er i overensstemmelse med følgende direktiver og standarder.

ES Nosotros, Numatic declaramos bajo nuestra única responsabilidad que el producto antes mencionado está en conformidad con las siguientes directivas y normas

ET Meie, Numatic Käesolevaga kinnitame ja kanname ainuisikulist vastutust, et eespool nimetatud toode on kooskõlas järgmiste direktiivide ja

FR Numatic déclare sous notre seule responsabilité que le produit mentionné ci-dessus est conforme aux directives et normes suivantes.

BG Ние, Numatic С настоящото декларираме на своя лична отговорност, че посочените по-горе продуктът е в съответствие със следните директиви и стандарти.

EL Εμείς, Numatic δηλώνουμε με αποκλειστική μας ευθύνη, ότι το προαναφερόμενο προϊόν συμμορφώνεται με τις ακόλουθες οδηγίες και πρότυπα.

HU Mi, Numatic Kijelentjük, egyedüli felelősséggel, hogy a fent említett termék megfelel az alábbi irányelveknek és szabványoknak

IT Noi, Numatic dichiara sotto la propria responsabilità, che il prodotto di cui sopra è conforme alle seguenti direttive e norme.

LT Mes, "Numatic pareiškiu vienašališkos atsakomybės, kad pirmiau minėtas produktas atitinka šias direktyvas ir standartus

NL We verklaren Numatic hierbij op eigen verantwoordelijkheid, dat het bovengenoemde product voldoet aan de volgende richtlijnen en normen

NO Vi, Numatic erklærer herved under eget ansvar, at det ovennevnte produktet er i samsvar med følgende direktiver og standarder

PT Nós, a Numatic declaramos, sob nossa exclusiva responsabilidade, que o produto acima mencionado está em conformidade com as diretrizes e normas a seguir.

PL My, Numatic Niniejszym oświadczamy z pełną odpowiedzialnością, że wyżej wymieniony produkt jest zgodny z następującymi dyrektywami i normami.

RO Noi, Numatic Prin prezenta declarăm pe propria răspundere, că produsul mai sus menționat este în conformitate cu următoarele standarde și directive.

RU Ми, Нилфиск овим изјављујем под пуном одговорношћу, да наведеног производ је у складу са следећим директивама и стандардима.

SV Vi Numatic förklarar härmed under eget ansvar att ovan nämnda produkt överensstämmer med följande direktiv och normer.

SL Mi, Numatic izjavljamo s polno odgovornostjo, da je zgoraj omenjeni izdelek v skladu z naslednjimi smernicami in standardi.

FI Me, Numatic täten vakuutamme omalla vastuulla, että edellä mainittu tuote on yhdenmukainen seuraavien direktiivien ja standardien mukaisesti

2006/42/EC	**Machinery Directive**	**EN60335-1:2012 + AC:2014 + A11:2014 + A13:2017 + A15:2021** **EN60335-2-72:2012** **EN62233:2008**
2014/30/EU	**EMC Directive**	**EN55014-1:2017 + A11:2020** **EN55014-2:1997 + A1:2001 + A2:2008** **EN61000-3-2:2014** **EN61000-3-3:2013**
2011/65/EU	**RoHS Directive**	

Authorised Signatory: Mr. Matthew Coles

Position: Head of Technology
Numatic International Limited
Chard,
Somerset, TA20 2GB, UK

Signed: M Coles Date: 1st February 2024

DEC-003 V3.3

This Machine Has Been Packed With The Following

- Brush / Pad ☐
- Floor Tool ☐
- Charging Lead ☐
- Battery ☐
- Fuse Pack ☐

Signed

Distributed by:

Numatic

numatic.com

Numatic International Limited (Head Office)
Chard, Somerset TA20 2GB, UNITED KINGDOM
Tel: 01460 68600 numatic.com

Numatic International GmbH
Fränkische Straße 15-19, 30455 Hannover, DEUTSCHLAND
Tel: +49 (0) 511 984 2160 numatic.de

Numatic International Denmark
Fränkische Straße 15-19, 30455 Hannover, DEUTSCHLAND
Tel: +45 (0) 316 40808 numatic-online.dk

Numatic International S.A.S
13/17 rue du Valengelier, EAE la Tuilerie, 77500 Chelles, FRANCE
Tel: +33 (0) 164 726 161 numatic.fr

Numatic International BV
Vennootsweg 15, 2404 CG, Alphen aan den Rijn, NEDERLAND
Tel: +31 (0) 172 467 999 numatic.nl

Numatic International Schweiz AG.
Sihlbruggstrasse 3A, 6340 Baar, SCHWEIZ
Tel: +41 (0) 41 768 0760 numatic.ch

Numatic International (PTY) Ltd.
Cnr. 16th & Pharmaceutical Road, Randjes Park, Midrand 1685, SOUTH AFRICA
Tel: +27 (0) 861 686 284 numatic.co.za

Numatic International ULDA
Rua Francisco da Silva Duarte, nº79,
4475-269 Santa Maria de Avioso, Castêlo da Maia, PORTUGAL
Tel: +351 220 047 700 numatic.pt

Numatic International Spain, S.L.U.
Av. Baix Llobregat, 5-7, Oficina bajos 1 (Parc Negocis Mas Blau II)
08820 El Prat de Llobregat (Barcelona), SPAIN
Tel: +34 93 647 22 22 numatic.es

Numatic International Italy S.R.L
Via Luigi Galvani, 2, Z.I. Talponedo, 33080 Porcia (PN), ITALY
Tel: +39 (0) 434 046 211 numatic.it

This Product has been comprehensively inspected and checked during every stage of its manufacture.
Including an in-depth electrical safety and functionality test.

Specification subject to change without prior notice
numatic.com © Numatic International Limited

244466 09/24 (A18)