NCC440NX-Daily Maintenance

Compact and Cordless Scrubber Dryer

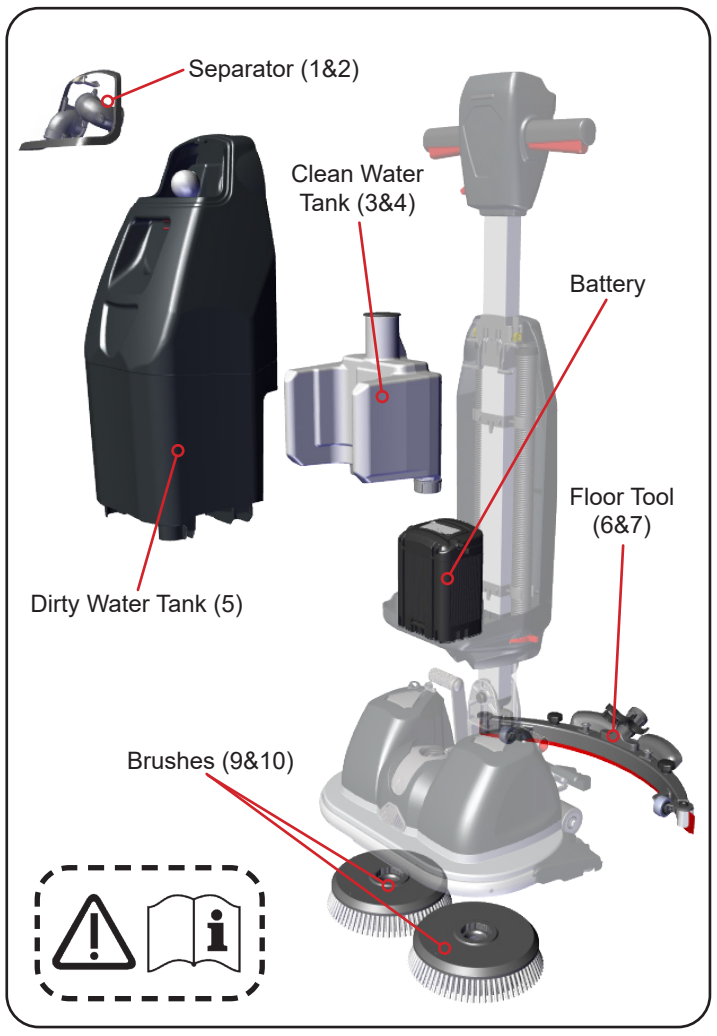

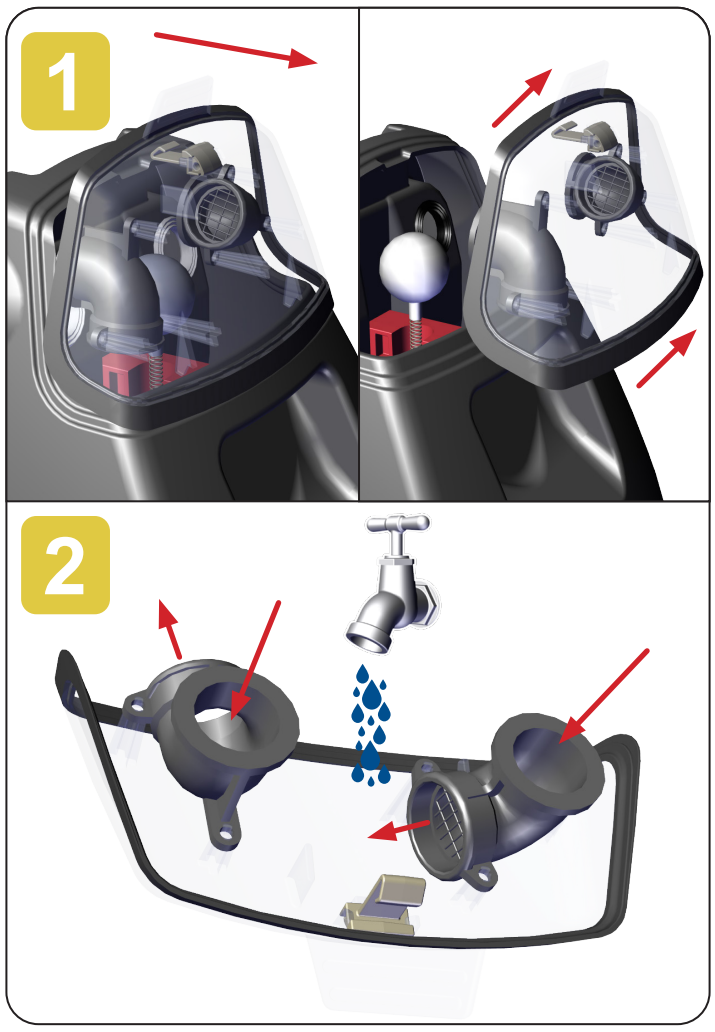

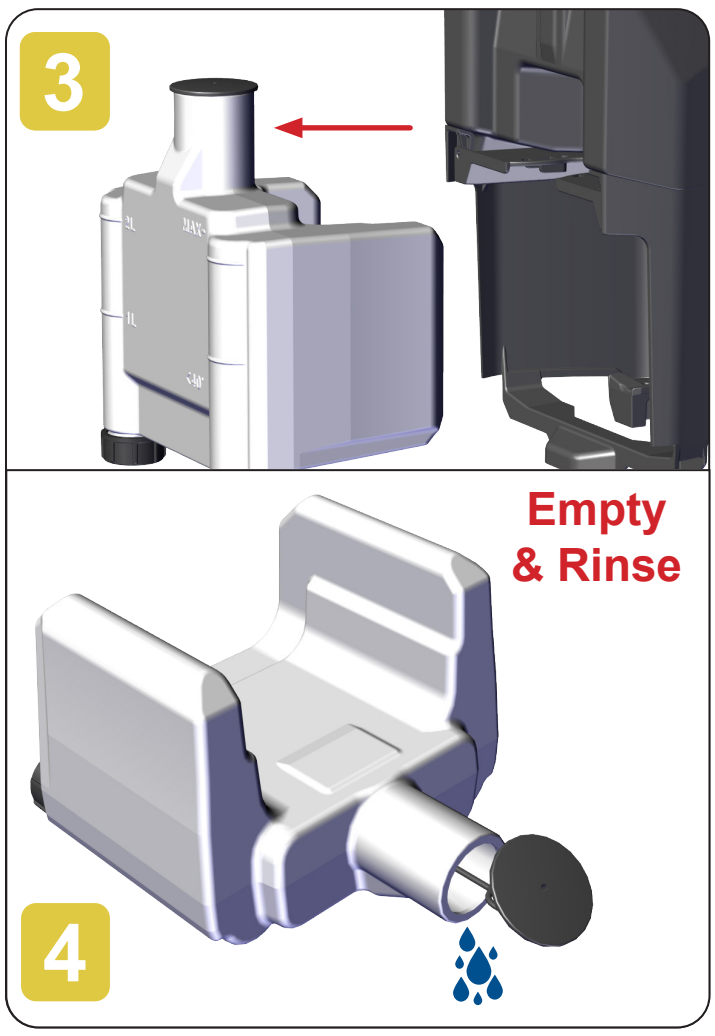

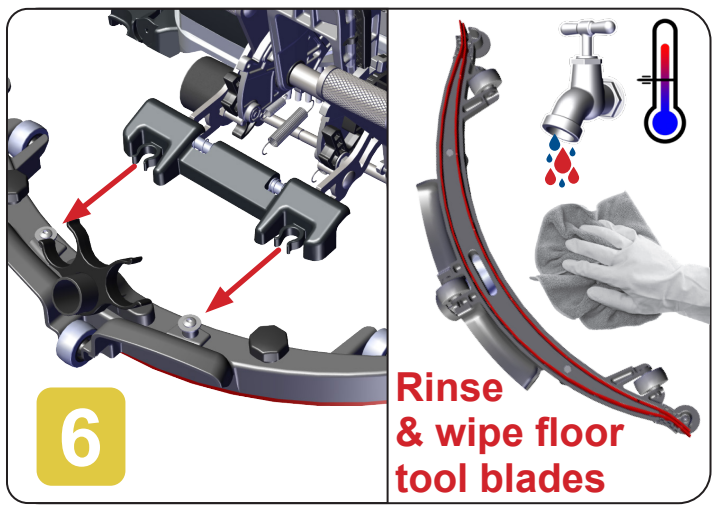

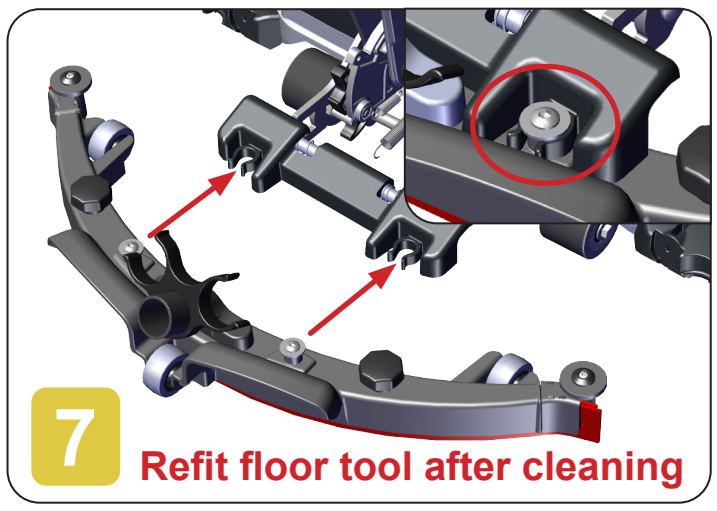

WARNING! CAREFULLY LOWER THE MACHINE, DO NOT DROP THE MACHINE ON THE HANDLE.

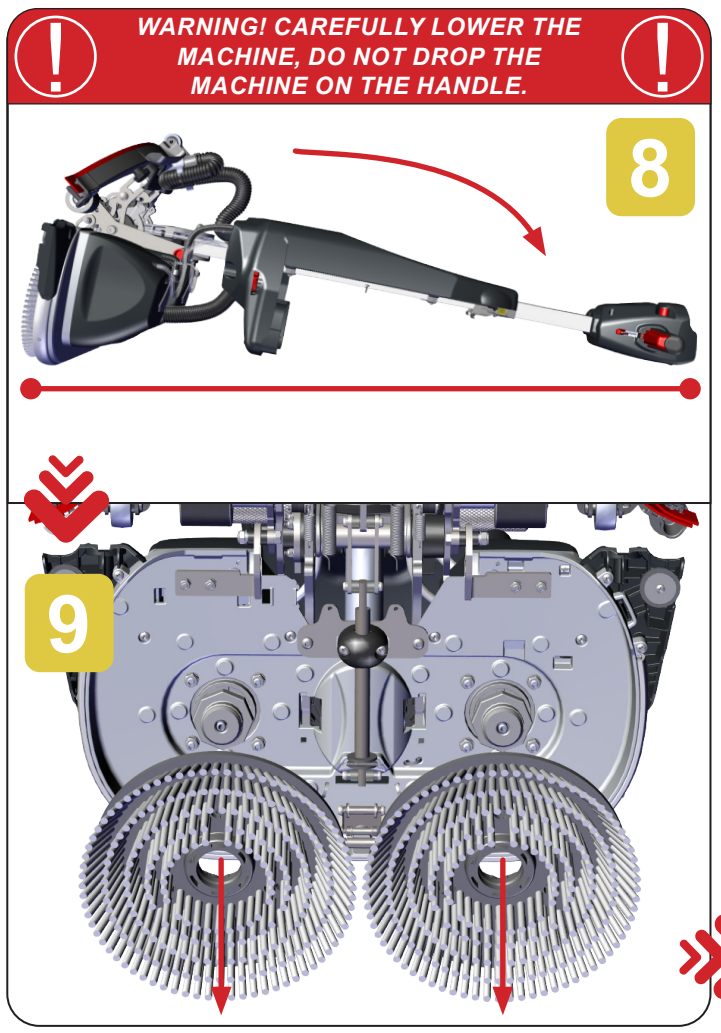

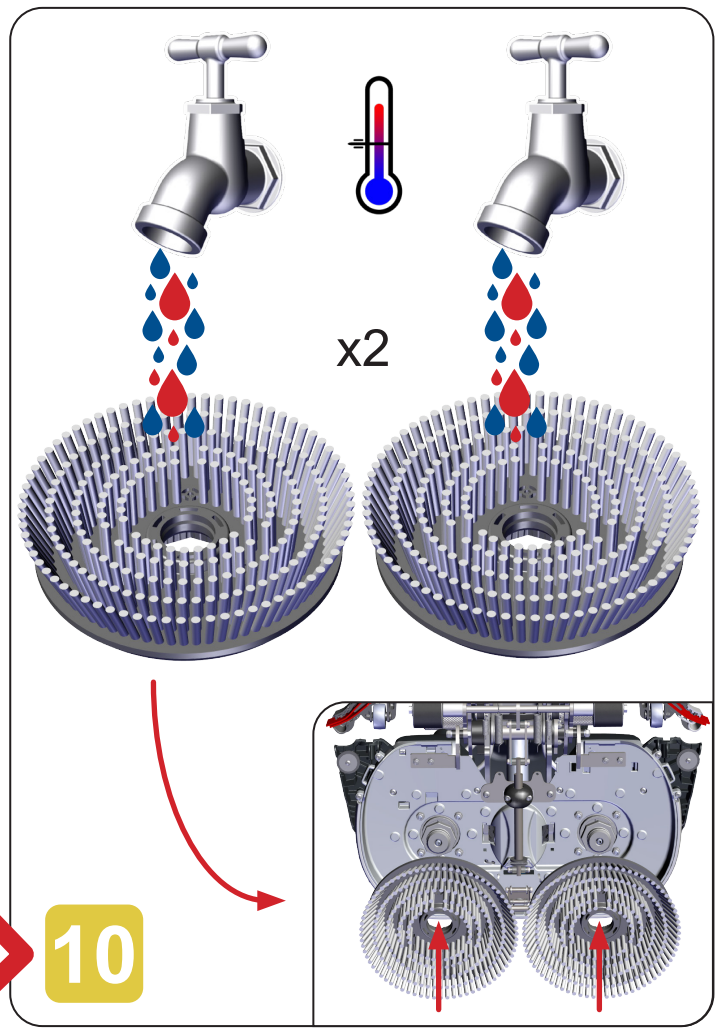

After cleaning the machine and all the components, reassemble the machine. Then place the machine back into its stored location.

©Numatic International Limited 2024. Specification subject to change without prior notice. numatic.com